HCD-BX5/DX5/DX5J

SERVICE MANUAL

Ver 1.1 2002.07

Photo: HCD-BX5

US Model
Canadian Model
AEP Model
UK Model
HCD-BX5
E Model
Australian Model
HCD-DX5/DX5J

- HCD-BX5/DX5/DX5J are the tuner, deck, CD and amplifier section in MHC-BX5/DX5/DX5J.

CD Section	Model Name Using Similar Mechanism	NEW
	CD Mechanism Type	CDM58-K2BD38
	Base Unit Name	BU-K2BD38
	Optical Pick-up Name	KSM-213DAP
Tape deck Section	Model Name Using Similar Mechanism	NEW
	Tape Transport Mechanism Type	TCM-230MWR11

SPECIFICATIONS

AUDIO POWER SPECIFICATIONS:
(HCD-BX5 US model only)
POWER OUTPUT AND TOTAL HARMONIC DISTORTION:
with 6 ohm loads both channels driven, from 120-10,000 Hz; rates 95 watts per channel minimum RMS power, with no more than 10% total harmonic distortion from 250 milliwatts to rated output.

Amplifier section
US, Canadian model:
HCD-BX5:
Continuous RMS power output (reference)
80 + 80 watts
(6 ohms at 1 kHz, 10% THD)
Total harmonic distortion less than 0.07%
(6 ohms at 1 kHz, 50 W)

AEP, UK model:
HCD-BX5:
DIN power output (rated) 80 + 80 watts
(6 ohms at 1 kHz, DIN)
Continuous RMS power output (reference)
100 + 100 watts
(6 ohms at 1 kHz, 10% THD)
Music power output (reference)
170 + 170 watts
(6 ohms at 1 kHz, 10% THD)

Other model:
HCD-DX5:
The following measured at AC 120, 220, 240 V 50/60 Hz
DIN power output (rated) 95 + 95 watts
(6 ohms at 1 kHz, DIN)
Continuous RMS power output (reference)
125 + 125 watts
(6 ohms at 1 kHz, 10% THD)

Inputs
MD/VIDEO IN: (phono jacks) voltage 450/250 mV, impedance 47 kilohms
MIC: (mini jack) sensitivity 1 mV, impedance 10 kilohms

Outputs
PHONES: (stereo mini jack) accepts headphones of 8 ohms or more
SPEAKER: accepts impedance of 6 to 16 ohms

CD player section
System: Compact disc and digital audio system
Laser: Semiconductor laser (λ=780 nm)
Emission duration: continuous
Laser output: Max. 44.6 μW*
*This output is the value measured at a distance of 200 mm from the objective lens surface on the Optical Pick-up Block with 7 mm aperture.

— Continued on next page —

COMPACT DISC DECK RECEIVER

9-929-058-12
2002G1600-1
© 2002.07
Sony Corporation
Home Audio Company
Published by Sony Engineering Corporation

SONY

Wavelength	780 – 790 nm
Frequency response	2 Hz – 20 kHz (±0.5 dB)
Signal-to-noise ratio	More than 90 dB
Dynamic range	More than 90 dB
CD OPTICAL DIGITAL OUT	
(Square optical connector jack, rear panel)	
Wavelength	660 nm
Output Level	–18 dBm

Tape player section

Recording system	4-track 2-channel stereo
Frequency response	40 – 13,000 Hz (±3 dB), using Sony TYPE I cassette

Tuner section

FM stereo, FM/AM superheterodyne tuner

FM tuner section

Tuning range	87.5 – 108.0 MHz
Antenna	FM lead antenna
Antenna terminals	75 ohm unbalanced
Intermediate frequency	10.7 MHz

AM tuner section

Tuning range	
US, Canadian, Mexican, Argentina models:	
	530 – 1,710 kHz
	(with the interval set at 10 kHz)
	531 – 1,710 kHz
	(with the interval set at 9 kHz)
AEP, Saudi Arabia models:	
	531 – 1,602 kHz
	(with the interval set at 9 kHz)
Other models:	531 – 1,602 kHz
	(with the interval set at 9 kHz)
	530 – 1,710 kHz
	(with the interval set at 10 kHz)
Antenna	AM loop antenna
Antenna terminals	External antenna terminal
Intermediate frequency	450 kHz

General

Power requirements	
US, Canadian models:	120 V AC, 60 Hz
AEP, UK model:	230 V AC, 50/60 Hz
Australian model:	230-240 V AC, 50/60 Hz
Mexican model:	120 V AC, 50/60 Hz
Thailand model:	220 V AC, 50/60 Hz
Other models:	120 V, 220 V or 230 - 240 V AC, 50/60 Hz
	Adjustable with voltage selector
Power consumption	
US model:	
HCD-BX5:	160 watts
Canadian model:	
HCD-BX5:	150 watts
AEP, UK model:	
HCD-BX5:	190 watts
Other models:	
HCD-DX5:	230 watts
Dimensions (w/h/d)	Approx. 280 x 360 x 425 mm
Mass	
US model:	
HCD-DX5:	Approx. 9.5 kg
HCD-BX5:	Approx. 8.6 kg

Design and specifications are subject to change without notice.

SAFETY CHECK-OUT

(US model only)

After correcting the original service problem, perform the following safety checks before releasing the set to the customer: Check the antenna terminals, metal trim, "metallized" knobs, screws, and all other exposed metal parts for AC leakage. Check leakage as described below.

LEAKAGE

The AC leakage from any exposed metal part to earth ground and from all exposed metal parts to any exposed metal part having a return to chassis, must not exceed 0.5 mA (500 microampers). Leakage current can be measured by any one of three methods.

1. A commercial leakage tester, such as the Simpson 229 or RCA WT-540A. Follow the manufacturers' instructions to use these instruments.

2. A battery-operated AC milliammeter. The Data Precision 245 digital multimeter is suitable for this job.

3. Measuring the voltage drop across a resistor by means of a VOM or battery-operated AC voltmeter. The "limit" indication is 0.75 V, so analog meters must have an accurate low-voltage scale. The Simpson 250 and Sanwa SH-63Trd are examples of a passive VOM that is suitable. Nearly all battery operated digital multimeters that have a 2V AC range are suitable. (See Fig. A)

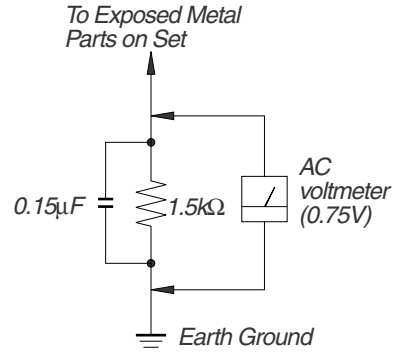

Fig. A. Using an AC voltmeter to check AC leakage.

SAFETY-RELATED COMPONENT WARNING!!

COMPONENTS IDENTIFIED BY MARK ⚠ OR DOTTED LINE WITH MARK ⚠ ON THE SCHEMATIC DIAGRAMS AND IN THE PARTS LIST ARE CRITICAL TO SAFE OPERATION. REPLACE THESE COMPONENTS WITH SONY PARTS WHOSE PART NUMBERS APPEAR AS SHOWN IN THIS MANUAL OR IN SUPPLEMENTS PUBLISHED BY SONY.

ATTENTION AU COMPOSANT AYANT RAPPORT À LA SÉCURITÉ!

LES COMPOSANTS IDENTIFÉS PAR UNE MARQUE ⚠ SUR LES DIAGRAMMES SCHÉMATIQUES ET LA LISTE DES PIÈCES SONT CRITIQUES POUR LA SÉCURITÉ DE FONCTIONNEMENT. NE REMPLACER CES COMPOSANTS QUE PAR DES PIÈSES SONY DONT LES NUMÉROS SONT DONNÉS DANS CE MANUEL OU DANS LES SUPPÉMENTS PUBLIÉS PAR SONY.

NOTES ON HANDLING THE OPTICAL PICK-UP BLOCK OR BASE UNIT

The laser diode in the optical pick-up block may suffer electrostatic break-down because of the potential difference generated by the charged electrostatic load, etc. on clothing and the human body.
During repair, pay attention to electrostatic break-down and also use the procedure in the printed matter which is included in the repair parts.
The flexible board is easily damaged and should be handled with care.

NOTES ON LASER DIODE EMISSION CHECK

The laser beam on this model is concentrated so as to be focused on the disc reflective surface by the objective lens in the optical pick-up block. Therefore, when checking the laser diode emission, observe from more than 30 cm away from the objective lens.

Laser component in this product is capable of emitting radiation exceeding the limit for Class 1.

This appliance is classified as a CLASS 1 LASER product. The CLASS 1 LASER PRODUCT MARKING is located on the rear exterior.

CAUTION
Use of controls or adjustments or performance of procedures other than those specified herein may result in hazardous radiation exposure.

Notes on chip component replacement
- Never reuse a disconnected chip component.
- Notice that the minus side of a tantalum capacitor may be damaged by heat.

Flexible Circuit Board Repairing
- Keep the temperature of soldering iron around 270˚C during repairing.
- Do not touch the soldering iron on the same conductor of the circuit board (within 3 times).
- Be careful not to apply force on the conductor when soldering or unsoldering.

TABLE OF CONTENTS

1. SERVICE NOTE 4

2. GENERAL 5

3. DISASSEMBY 7

4. TEST MODE 12

5. MECHANICAL ADJUSTMENTS 16

6. ELECTRICAL ADJUSTMENTS 16

7. DIAGRAMS
7-1. Circuit Board Location 21
7-2. Block Diagrams 22
7-3. Printed Wiring Board BD Section 24
7-4. Schematic Diagram BD Section 25
7-5. Printed Wiring Board Main Section 26
7-6. Schematic Diagram Main Section (1/3) 27
7-7. Schematic Diagram Main Section (2/3) 28
7-8. Schematic Diagram Main Section (3/3) 29
7-9. Printed Wiring Board AMP Section 30
7-10. Schematic Diagram AMP Section 31
7-11. Printed Wiring Board Panel Section 32
7-12. Schematic Diagram Panel Section 33
7-13. Printed Wiring Board Leaf SW Section 34
7-14. Schematic Diagram Leaf SW Section 35
7-15. Printed Wiring Board Driver Section 36
7-16. Schematic Diagram Driver Section 37
7-17. Printed Wiring Board Trans Section 38
7-18. Schematic Diagram Trans Section 39
7-19. IC Pin Function Description 40
7-20. IC Block Diagrams 42

8. EXPLODED VIEWS
8-1. Main Section 45
8-2. Panel Section 46
8-3. Main Board Section 47
8-4. Tape Mechanism Section 48
8-5. CD Mechanism Section 49

9. ELECTRICAL PARTS LIST 50

MODEL IDENTIFICATION

— BACK PANEL —

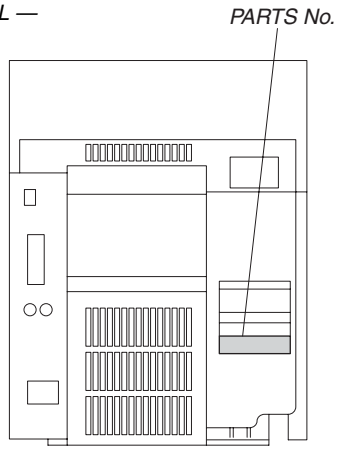

MODEL	PARTS No.
AED, AEP, CIS, UK, G, AUS, KR, MX, TH models	4-225-040-0☐
AR, E, EA, SP, TW, MY models	4-225-040-1☐
US, CND models	4-225-040-2☐

- Abbreviation

CND	: Canadian model	SP	: Singapore model
AUS	: Australian model	TH	: Thai model
G	: German model	TW	: Taiwan model
AED	: North European model	KR	: Korea model
EA	: Saudi Arabia model	MX	: Mexican model
MY	: Malaysia model	AR	: Argentina model

SECTION 1
SERVICE NOTE

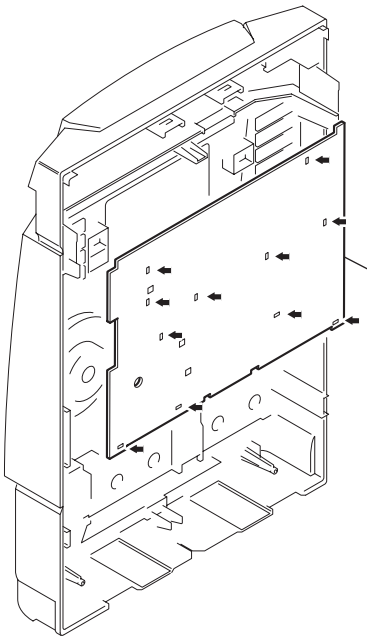

❶ *Cut the eleven melted-connection points with a cutting plier.*

Note for installing the panel board

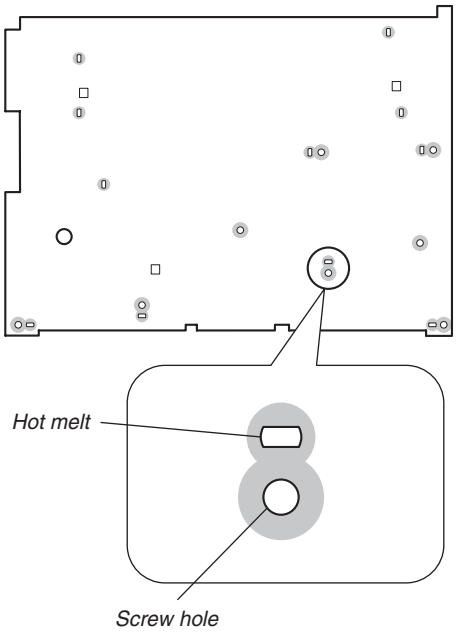

Attach the panel board with
six screws (+BVTP 2.6 × 8)
after the board is removed once.
Do not tighten the screws excessively.

SECTION 2
GENERAL

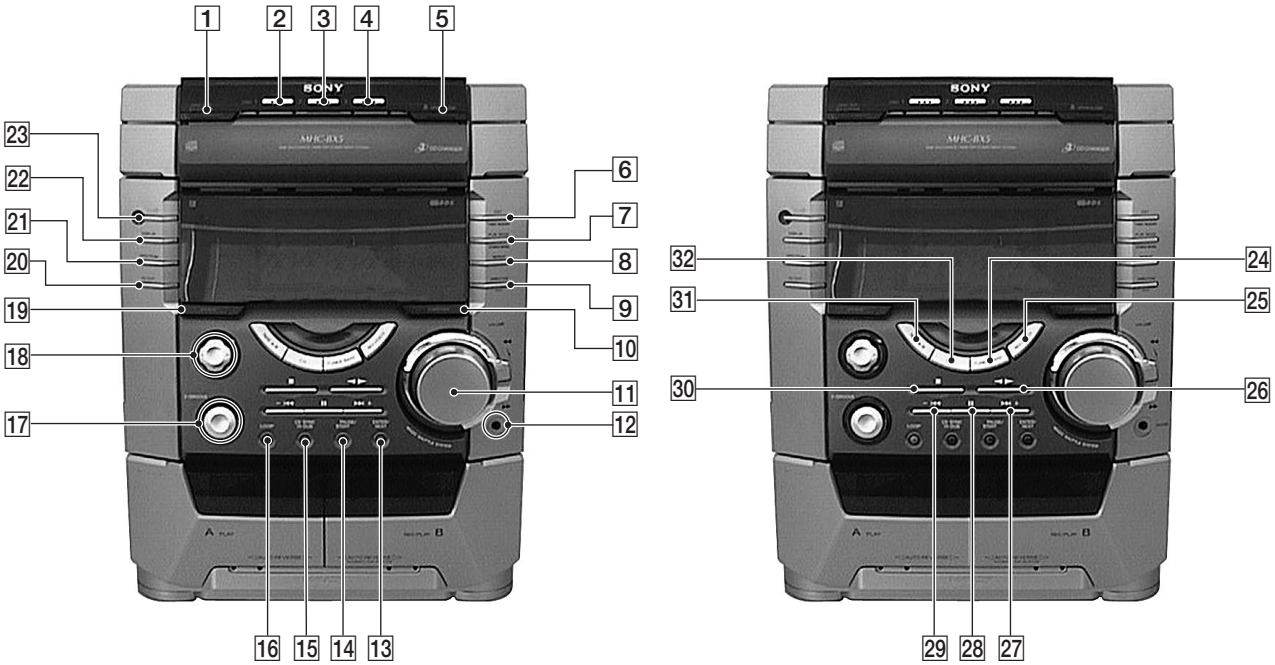

Photo: HCD-BX5

1 DISC SKIP EX-CHANGE button
2 DISC 1 button and indicator
3 DISC 2 button and indicator
4 DISC 3 button and indicator
5 ⏏ OPEN/CLOSE button
6 EDIT, TUNER MOMERY button
7 PLAY MODE, STEREO/MONO button
8 REPEAT button
9 DIRECTION, PTY knob
10 SURROUND button
11 VOLUME knob
12 PHONE jack
13 ENTER/NEXT button
14 REC/PAUSE START button and indicator
15 CD SYNC HI-DUBB button
16 LOOP button
17 V-GROOVE button and indicator
18 CURSOL button and indicator
19 GROOVE button
20 EQ EDIT button
21 SPECTRUM button
22 DISPLAY button
23 I/⏻ button and indicator
24 TUNER BAND button
25 MD (VIDEO) button
26 ◀▶ button
27 ▶▶I + button
28 II button
29 – I◀◀ button
30 ■ button
31 TAPE A/B button
32 CD button

Step 2: Setting the time

You must set the time before using the timer functions.

The clock is on a 24-hour system for the European model and a 12-hour system for other models.

The 24-hour system model is used for illustration purposes.

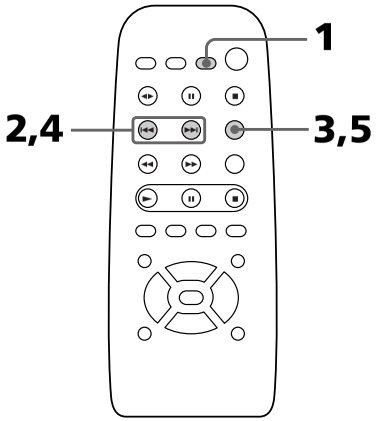

1 Press CLOCK/TIMER SET.
The hour indication flashes.

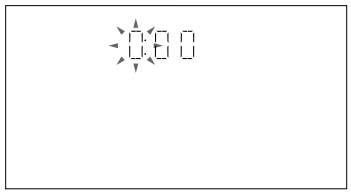

2 Press ⏮ or ⏭ repeatedly to set the hour.

3 Press ENTER.
The minute indication flashes.

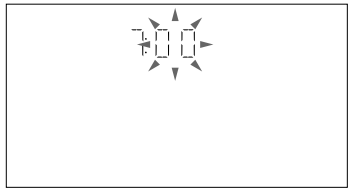

4 Press ⏮ or ⏭ repeatedly to set the minute.

5 Press ENTER.
The clock starts working.

Tip

If you've made a mistake, start over from step 1.

To change the time

The previous explanation shows you how to set the time while the power is off. To change the time while the power is on, do the following:

1 Press CLOCK/TIMER SET.
2 Press ⏮ or ⏭ repeatedly to select SET CLOCK.
3 Press ENTER.
4 Perform steps 2 through 5 above.

Note

The clock settings are canceled when you disconnect the power cord or if a power failure occurs.

Step 1: Hooking up the system (continued)

To attach the front speaker pads

Attach the supplied front speaker pads to the bottom of the speakers to stabilize the speakers and prevent them from slipping.

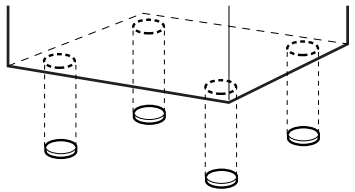

Positioning the speakers (MHC-BX7/DX7 only)

Before you connect them, determine the best location for your speakers.

1 Place the front speakers at an angle of 45 degrees from your listening position.

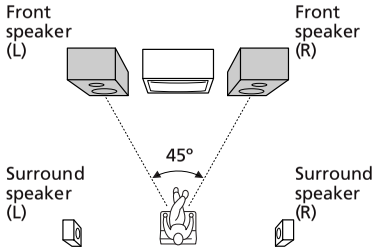

2 Place the surround speakers facing each other at about 60 to 90 cm above your listening position.

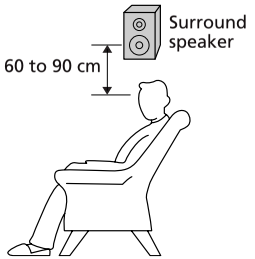

Inserting two size AA (R6) batteries into the remote

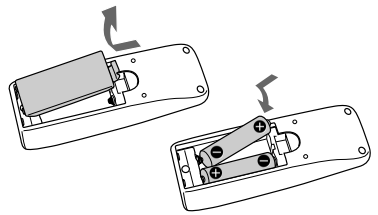

Tip

With normal use, the batteries should last for about six months. When the remote no longer operates the system, replace both batteries with new ones.

Note

If you do not use the remote for a long period of time, remove the batteries to avoid possible damage from battery leakage.

When carrying this system

Do the following to protect the CD mechanism.

1 Make sure that all discs are removed from the unit.
2 Hold down CD and then press I/⏻ so that "LOCK" appears in the display.
3 Unplug the AC power cord.

SECTION 3
DISASSEMBY

Note : Follow the disassembly procedure in the numerical order given.

3-1. UPPER CASE (TOP)

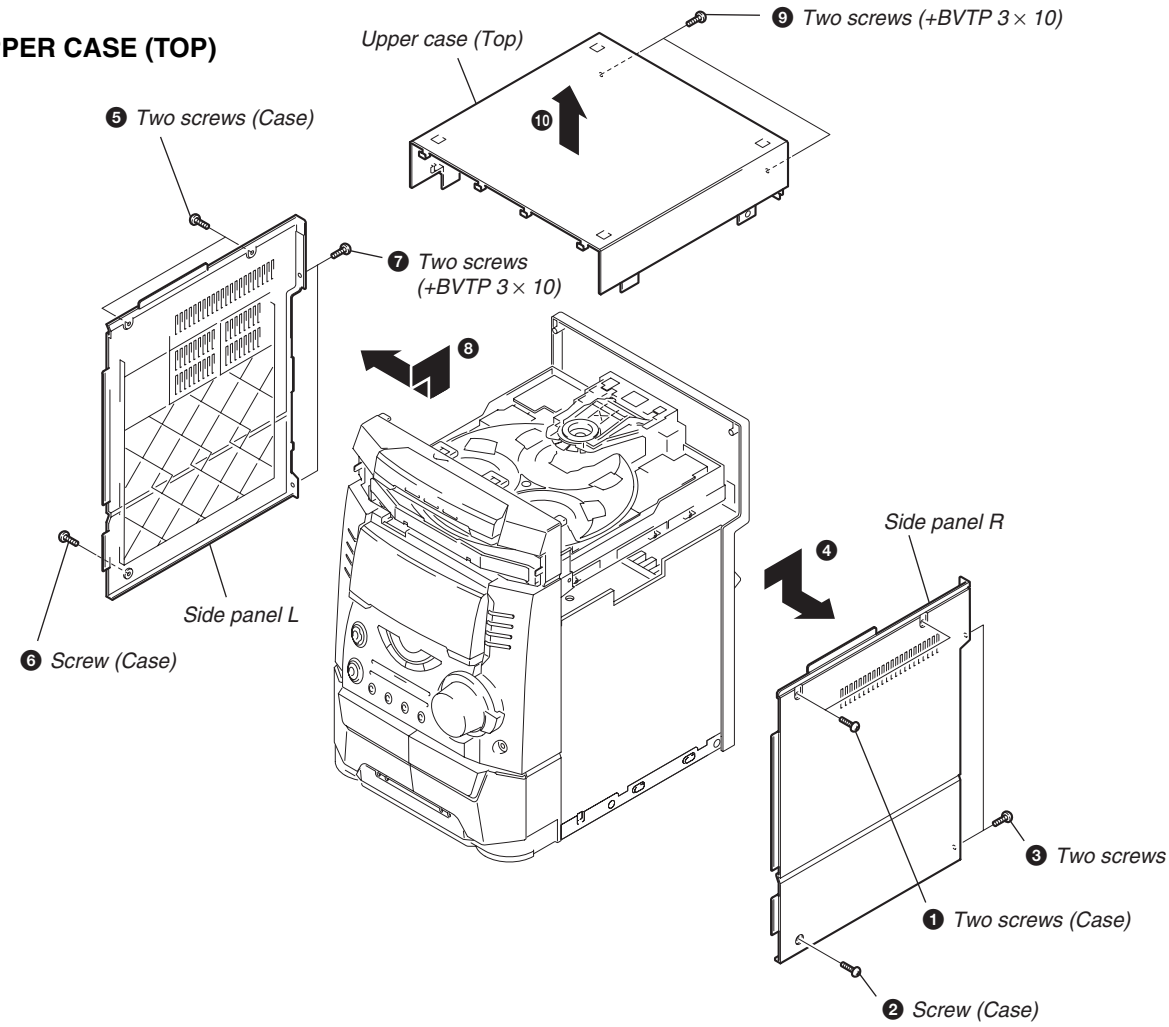

3-2. LOADING PANEL ASSY

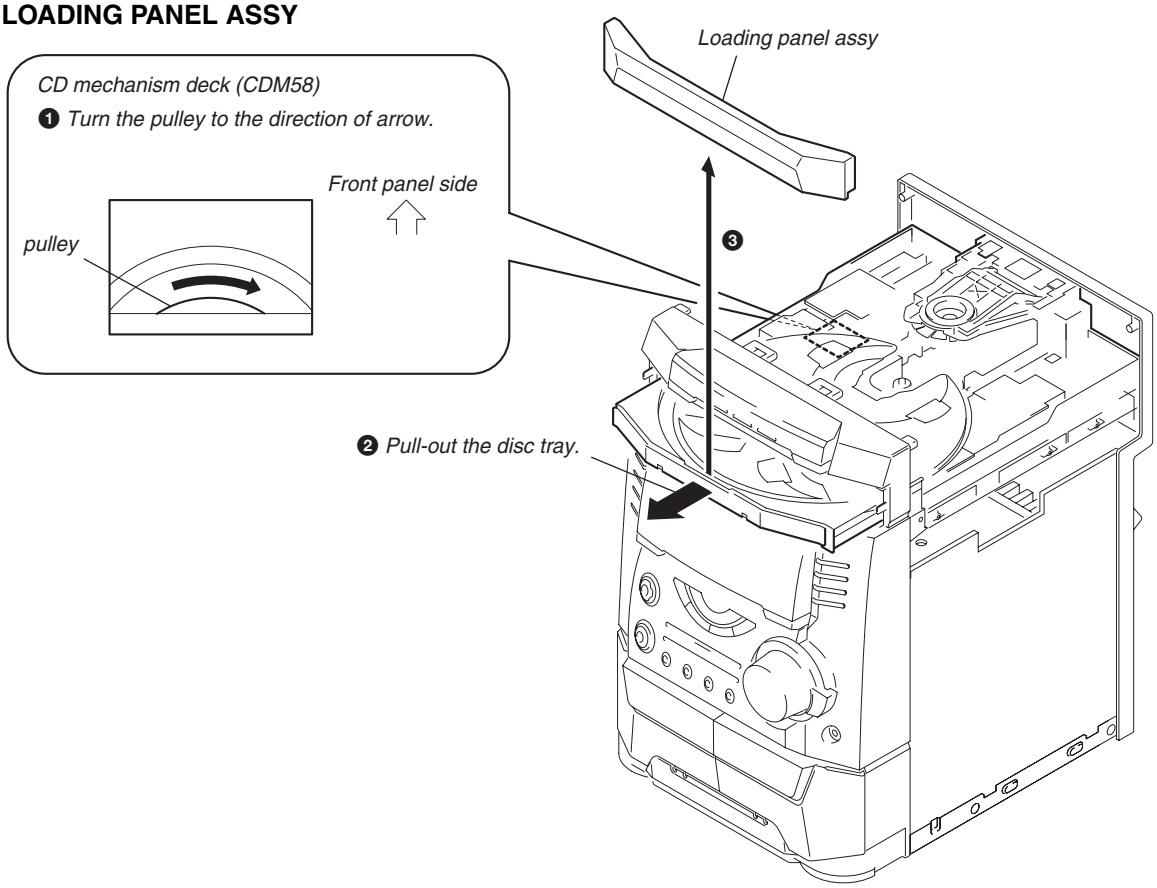

3-3. FRONT PANEL SECTION

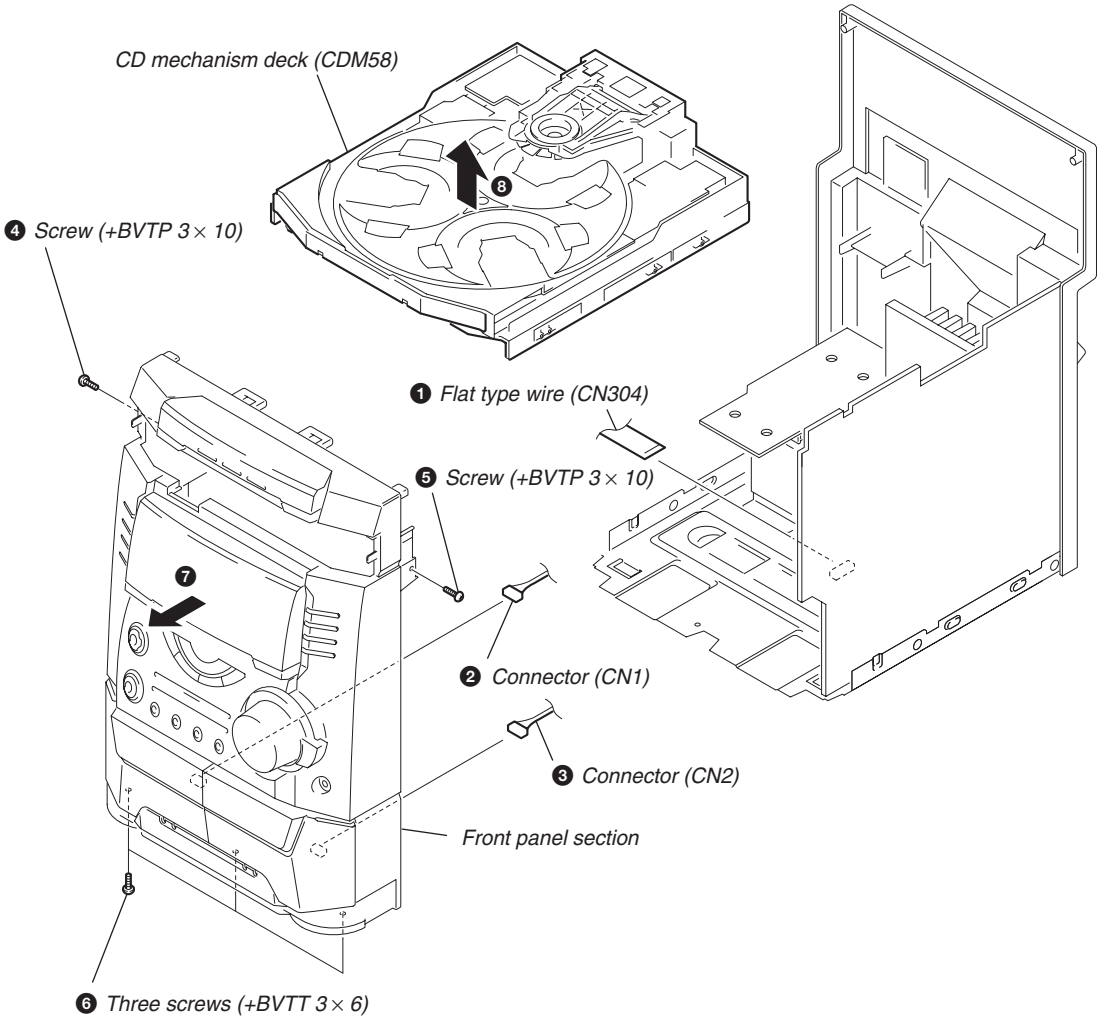

3-4. TAPE MECHANISM DECK

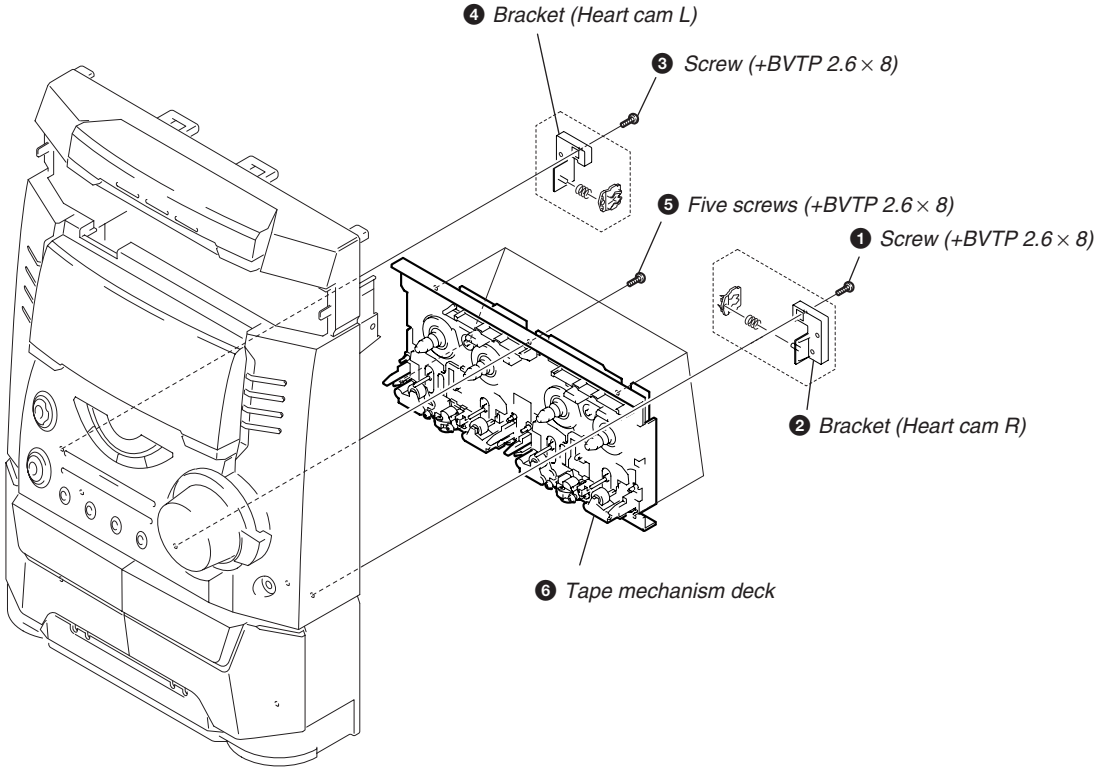

3-5. PANEL BOARD

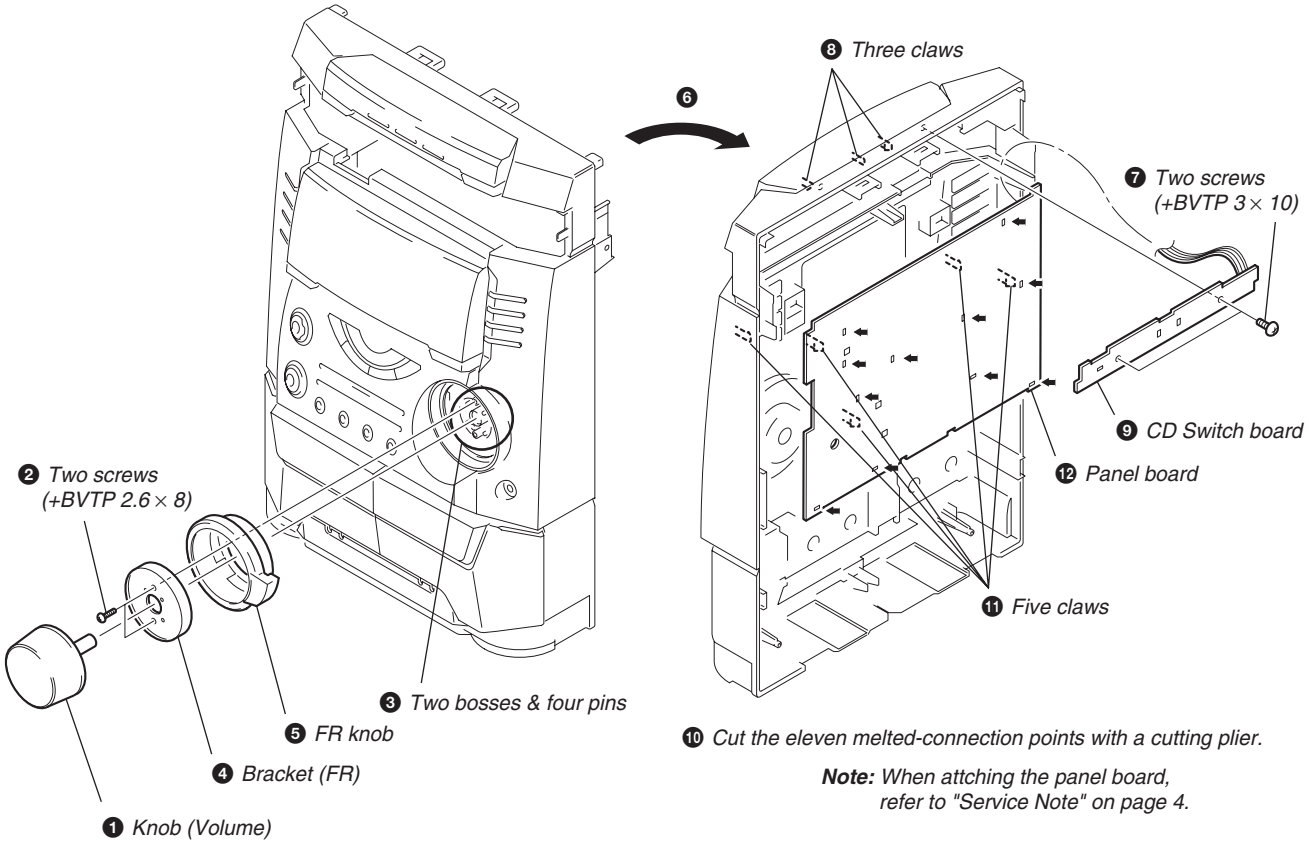

❿ Cut the eleven melted-connection points with a cutting plier.

Note: *When attching the panel board, refer to "Service Note" on page 4.*

3-6. SUB-TRANS BOARD AND TRANS BOARD

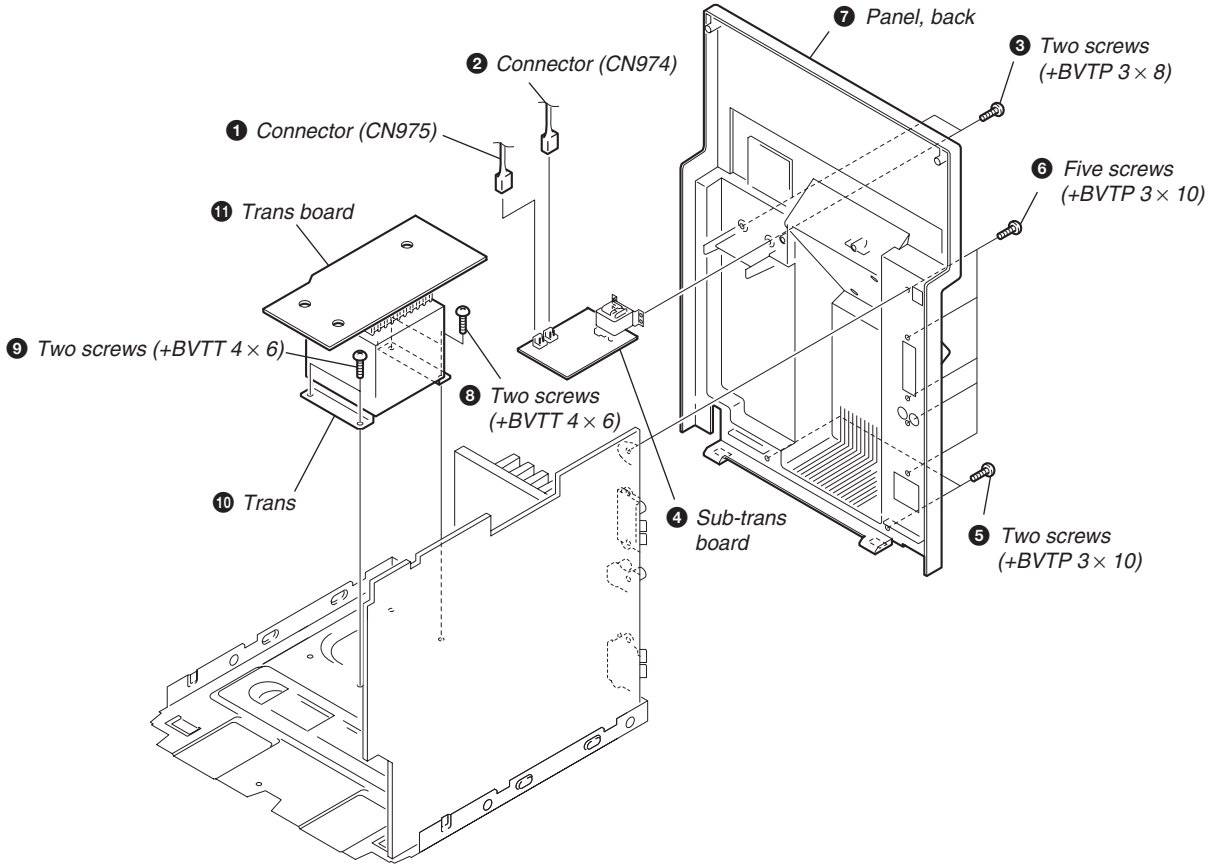
❼ Panel, back
❸ Two screws (+BVTP 3× 8)
❷ Connector (CN974)
❶ Connector (CN975)
❻ Five screws (+BVTP 3× 10)
⓫ Trans board
❾ Two screws (+BVTT 4× 6)
❽ Two screws (+BVTT 4× 6)
❿ Trans
❹ Sub-trans board
❺ Two screws (+BVTP 3× 10)

3-7. MAIN BOARD AND AMP BOARD

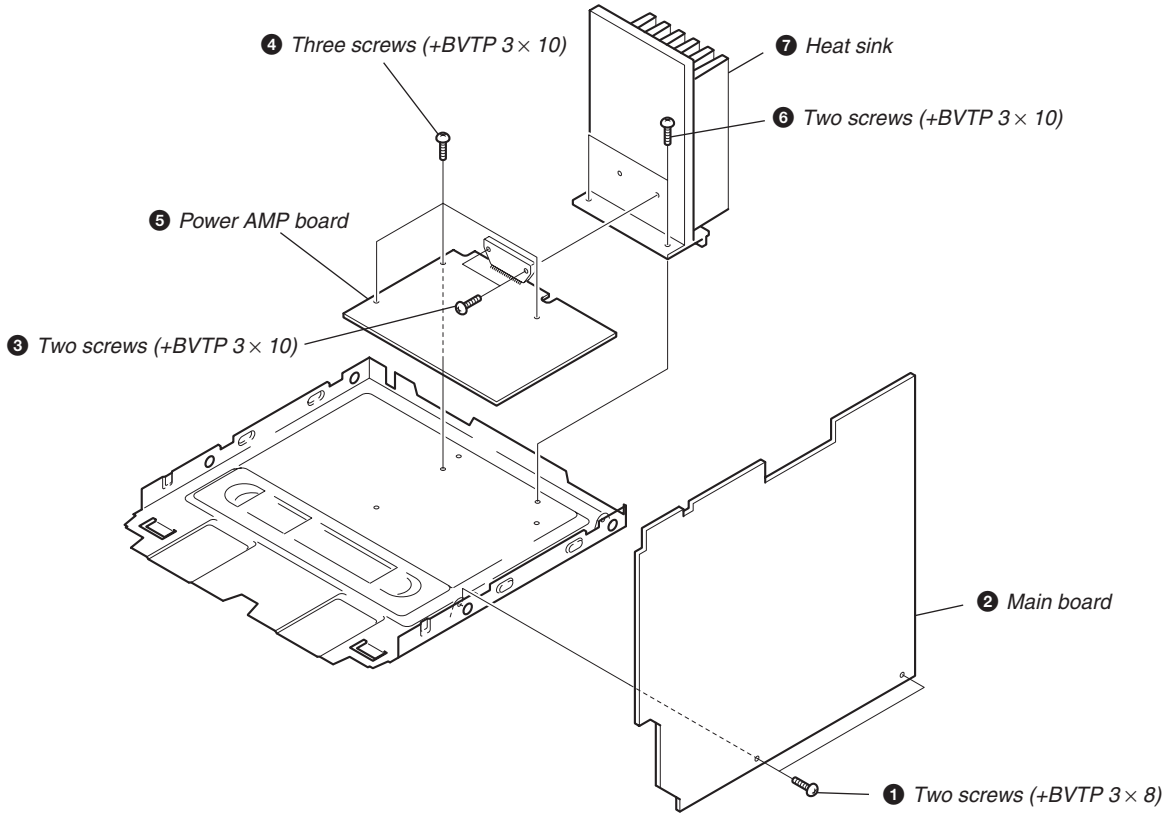
❹ Three screws (+BVTP 3× 10)
❼ Heat sink
❻ Two screws (+BVTP 3× 10)
❺ Power AMP board
❸ Two screws (+BVTP 3× 10)
❷ Main board
❶ Two screws (+BVTP 3× 8)

3-8. LEAF SW BOARD, HEAD (A) BOARD AND HEAD (B) BOARD

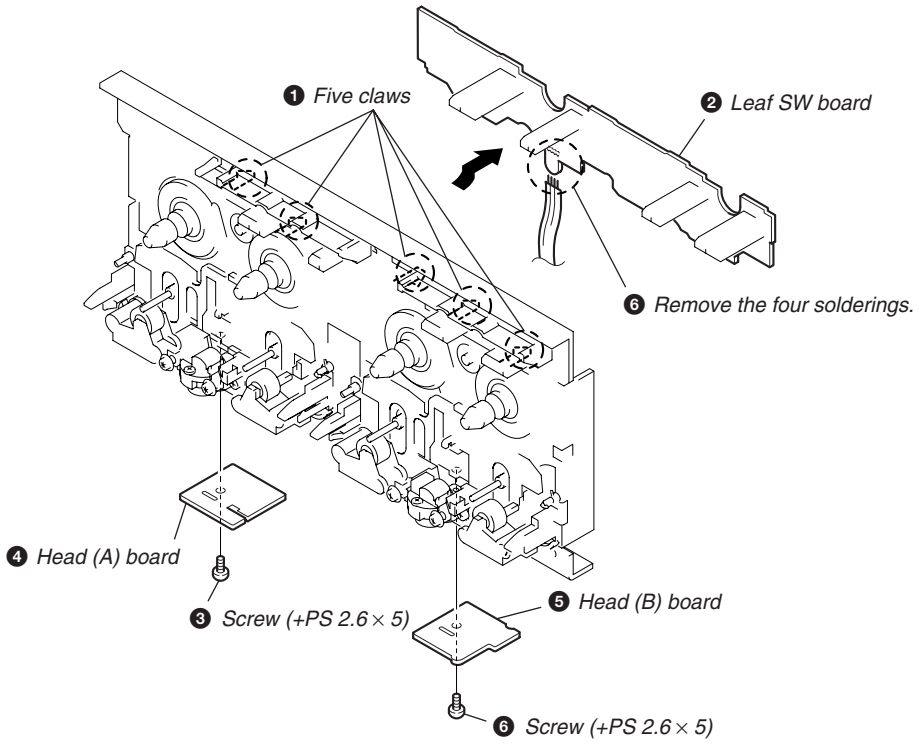

3-9. BASE UNIT

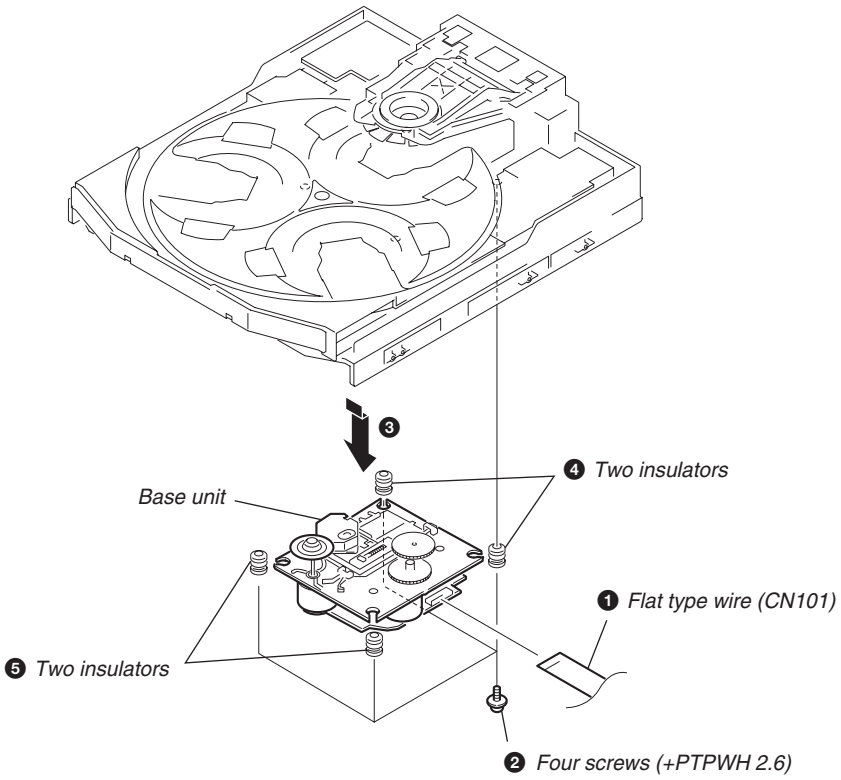

3-10. DRIVER BOARD, MOTOR BOARD AND ADDRESS SENSOR BOARD

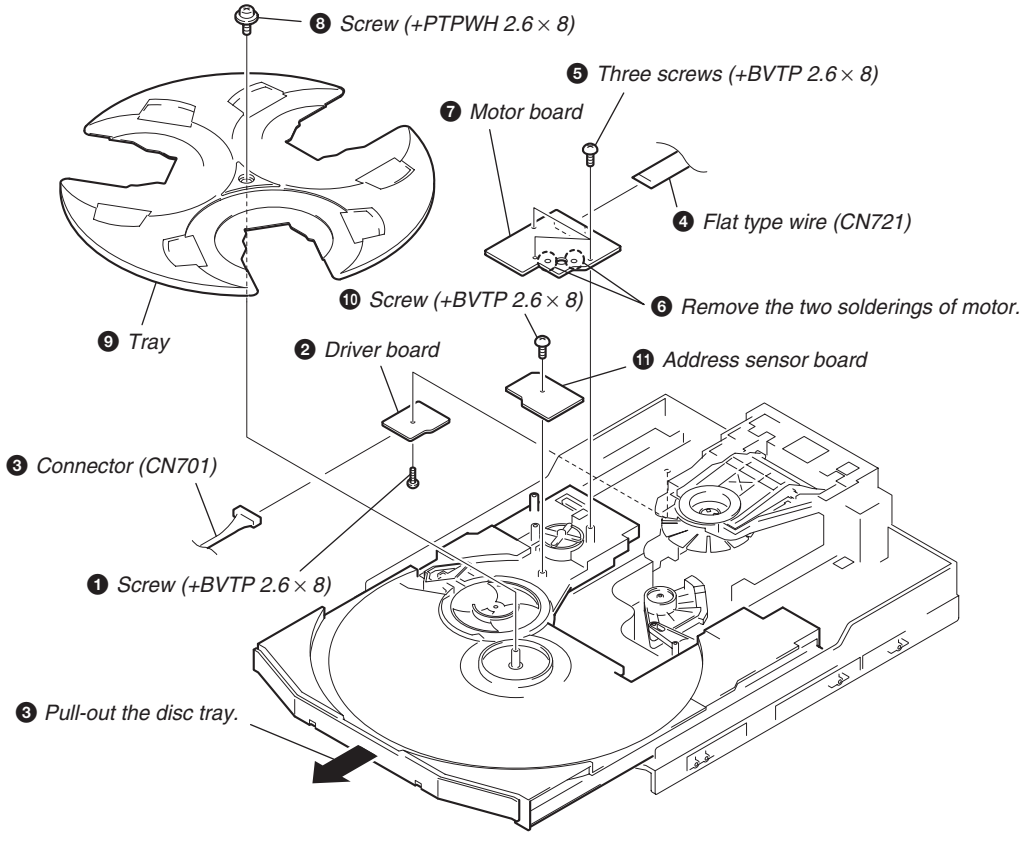
❽ Screw (+PTPWH 2.6 × 8)
❺ Three screws (+BVTP 2.6 × 8)
❼ Motor board
❹ Flat type wire (CN721)
❿ Screw (+BVTP 2.6 × 8)
❻ Remove the two solderings of motor.
❾ Tray
❷ Driver board
⓫ Address sensor board
❸ Connector (CN701)
❶ Screw (+BVTP 2.6 × 8)
❸ Pull-out the disc tray.

SECTION 4
TEST MODE

[MC Cold Reset]

• The cold reset clears all data including preset data stored in the RAM to initial conditions. Execute this mode when returning the set to the customer.

Procedure:

1. Press three buttons [■] , [ENTER], and [I/⏻] simulta-neously.
2. The fluorescent indicator tube displays “COLD RESET” and the set is reset.

[CD Ship Mode]

• This mode moves the pickup to the position durable to vibration. Use this mode when returning the set to the customer after repair.

Procedure:

1. Press [I/⏻] button to turn the set ON.
2. Press [CD] button and [I/⏻] button simultaneously.
3. After the "STANDBY" display blinks six times, a message “LOCK” is displayed on the fluorescent indicator tube, and the CD ship mode is set.

[MC Hot Reset]

• This mode resets the set with the preset data kept stored in the memory. The hot reset mode functions same as if the power cord is plugged in and out.

Procedure:

1. Press three buttons [■] , [ENTER], and [DISC 1] simultaneously.
2. The fluorescent indicator tube becomes blank instantaneously, and the set is reset.

[CD Service Mode]

• This mode can run the CD sled motor freely. Use this mode, for instance, when cleaning the pickup.

Procedure:

1. Press [I/⏻] button to turn the set ON.
2. Select the function “CD”.
3. Press three buttons [■], [ENTER], and [OPEN/CLOSE] simultaneously.
4. The CD service mode is selected.
5. With the CD in stop status, turn the shuttle knob clockwise to move the pickup to outside track, or turn the shuttle knob counter-clockwise to inside track.
6. To exit from this mode, perform as follows:
   1) Move the pickup to the most inside track.
   2) Press three buttons in the same manner as step 2.

Note: • Always move the pickup to most inside track when exiting from this mode. Otherwise, a disc will not be unloaded.
• Do not run the sled motor excessively, otherwise the gear can be chipped.

[VACS ON/OFF Mode]

• This mode is used to switch ON and OFF the VACS (Variable Attenuation Control System).

Procedure:

Press the [ENTER] and [SPECTRUM] buttons simultaneously. The message “VACS OFF” or “VACS ON” appears.

[Change-over of MW Tuner Step between 9 kHz and 10 kHz]

• A step of MW channels can be changed over between 9 kHz and 10 kHz.

Procedure:

1. Press [I/⏻] button to turn the set ON.
2. Select the function “TUNER”, and press [TUNER/BAND] button to select the BAND “MW”.
3. Press [I/⏻] button to turn the set OFF.
4. Press [ENTER] and [I/⏻] buttons simultaneously, and the display of fluorescent indicator tube changes to “MW 9 k STEP” or “MW 10 k STEP”, and thus the channel step is changed over.

[GC Test Mode]

• This mode is used to check the software version, FL tube, LED, keyboard and VACS.

Procedure:

1. Press three buttons [■], [ENTER], and [DISC 2] simultaneously.
2. LEDs and fluorescent indicator tube are all turned on.
3. When you want to enter the software version display mode, press [DISC 1]. The model number and destination are displayed.
4. Each time [DISC 1] is pressed, the display changes starting from MC version, GC version, VC version, CD version, CM version, ST version, TC version, TA version, TM version and BR version in this order, and returns to the model number and destination display.
5. When [DISC 3] is pressed while the version numbers are being displayed except model number and destination, year, month and day of the software creation appear. When [DISC 3] is pressed again, the display returns to the software version display. When [DISC 1] is pressed while year, month and day of the software creation are being displayed, the year, month and day of creation of the software versions are displayed in the same order of version display.
6. Press DISC 2 button, and the key check mode is activated.
7. In the key check mode, the fluorescent indicator tube displays “KEY0 VOL0”. Each time a button is pressed, “KEY” value increases. However, once a button is pressed, it is no longer taken into account.
   “VOL” value increases like 1, 2, 3 ... if rotating [VOLUME] knob in “+” direction, or it decreases like 0, 9, 8 ... if rotating in “–” direction.
8. Also when [DISC 3] is pressed after lighting of all LEDs and FL tubes, value of VACS appears.
9. To exit from this mode, press three buttons in the same manner as step 1, or disconnect the power cord.

[MC Test Mode]

• This mode is used to check operations of the respective sections of Amplifier, Tuner, CD and Tape.

Procedure:

1. Press the I/⏻ button to turn on the set.
2. Press the three buttons of ■, ENTER and DISC 3 simultaneously.
3. A message "TEST MODE" appears on the FL display tube.
4 When △ (CURSOR UP) button is pressed, GEQ increases to its maximum and a message "GEQ ALL MA" appears.
5. When ▽ (CURSOR DOWN) button is pressed, GEQ decreases to its minimum and a message "GEQ ALL M1" appears.
6. When ◁ (CURSOR LEFT) or ▷ (CURSOR RIGHT) button is pressed, GEQ is set to flat and a message "GEQ FLAT" appears.
7. When the VOLUME control knob is turned clockwise even slightly, the sound volume increases to its maximum and a message "VOLUME MAX" appears for two seconds, then the display returns to the original display.
8. When the VOLUME control knob is turned counter-clockwise even slightly, the sound volume decreases to its minimum and a message "VOLUME MIN" appears for two seconds, then the display returns to the original display.
9. In the test mode, the default-preset channel is called even when the TUNER is selected and an attempt is made to call the preset channel that has been stored in memory, by operating the Shuttle knob. (It means that the memory is cleared.)
10. When CD is selected and the EDIT button is pressed, the disc that is being chucked at this moment becomes the default setting. It means that the default disc only is accessed when any other discs are selected even though the display indication changes accordingly. At the same time, the DISK SKIP EXCHANGE and OPEN/CLOSE cannot be accepted. (It means that the tray motor and the turntable motor are disabled of their operation.)
11. When a tape is inserted in Deck B and recording is started, the input source function selects VIDEO automatically.
12. When ■ button is pressed to stop recording, the Tape (Deck) B is selected and tape is rewound using the Shuttle knob, tape is rewound, tape is stops at around the record-starting position and playback of the recorded portion of the tape is started. If PAUSE is inserted even once during recording, tape is rewound to the position around the PAUSE position and is played back.
13. When the CD SYNC HI-DUB Button is press during playback of Deck B, either normal speed or high speed can be selected by this button.
14. Select the desired loop by pressing the PLAY MODE button. Insert a test tape AMS-110A or AMS-RO to Deck A.
15. Press the SPECTRUM button to enter the AMS test mode.
16. After a tape is rewound first, the FF AMS is checked, and the mechanism is shut off after detecting the AMS signal twice.
17. Then the REW AMS is checked and the mechanism is shut off after detecting the AMS signal twice.
18. When the check is complete, a message of either OK or NG appears.
19. When you want to exit this mode, press the I/⏻ button twice. The cold reset is enforced at the same time.

[Aging Mode]

This mode can be used for operation check of CD section and tape deck section.

- If an error occurred:
  The aging operation stops and display status.
- If no error occurs:
  The aging operation continues repeatedly.

1. Operating method of Aging Mode

Turn on the main power and select "CD" of the function.

1) Set a disc in DISC1 tray. Select ALL DISC CONTINUE, and REPEAT OFF.
2) Load the tapes recording use into the decks A and B respectively.
3) Press three buttons [■], [ENTER], and [DISC SKIP/EX-CHANGE] simultaneously.
4) Aging operations of CD and tape are started at the same time.
5) To exit the aging mode, perform [MC Cold Reset].

3. Aging Mode in CD section

1) Display state

- No error occurs

Display

AGING[*][*][*][*]

Note:

[*][*][*][*] : Number of aging operations

Error display

E ** □ ### $$ %%
① ② ③ ④ ⑤

① **	The error No. 00 indicates the newest error. As the error No. increases, it means the older error. When you want to retrieve the error history, press the [PLAY MODE] button in the case of mechanism error. Or press the [REPEAT] button in the case of NO DISC error.	
② □	M: Mechanism error	D: No disc error
③ ###	Don't care	01: FOCUS ERROR 02: GFS ERROR 03: SETUP ERROR
④ $$	High order digits only D: Stopped during closing due to problems other than mechanism. E: Stopped during opening due to problems other than mechanism. C: Stopped during chucking due to problems other than mechanism. F: Stopped during EX-opening due to problems other than mechanism.	01: NO DISC judgment without chucking retry 02: NO DISC judgment after chucking retry
⑤ %%	Emergency related errors (High order digits only) 1: Stopped during chuck-up 2: Stopped during chuck-down 3: Time out by EX-OPEN 5: Time out by EX-CLOSE	Status at the time of NO DISC judgment (High order digits only) 1: STOP 2: SETUP 3: TOC READ 4: ACCESS 5: PLAY BACK 6: PAUSE 7: MANUAL SEARCH (PLAY) 8: MANUAL SEARCH (PAUSE)

- When the buttons [■], [ENTER] and [DISC 1] are pressed simultaneously, number of time of the mechanism error and the NO DISC error can be checked.
  Display: EMC**EDC** **: Number of times of error (Maximum three times)
  EMC: Mechanism error
  EDC: NO DISC error

- When aging operation is complete, be sure to perform the MC Cold Reset to reset the error history.

2) Operation during aging mode
In the aging mode, the program is executed in the following sequence.
(1) The disc tray opens and closes.
(2) The mechanism accesses DISC 2 and makes an attempt to read TOC. However, since there are no discs, a message "CD2 NO DISC" appears.
(3) The mechanism accesses DISC 3 and a message "CD3 NO DISC" appears.
(4) The disc tray turns to select a disc1.
(5) A disc is chucked.
(6) TOC of disc is read.
(7) The pickup accesses to the track 1, and playing 2 seconds.
(8) The pickup accesses to the last track, and playing 2 seconds.
(9) Every time when an aging operation of step 1 to step 8 is complete, the display "AGING[*][*][*][*]" value increases as the number of aging operations is counted up.
(10) Returns to step 1.

3. Aging Mode in Tape Deck section
1) Display state
• No error occurs
Display action now
• Error occurred
Display action last time

NO.	Display action	Action contents	Final timing
1	TAPE A AG-1	Rewind the TAPE A, B	The top of tape
2	TAPE A AG-2	FWD play the TAPE A	2 minutes playing
3	TAPE A AG-3	F.F. the TAPE A	20 second FF or the end of tape
4	TAPE A AG-4	REV play the TAPE A	2 minutes playing
5	TAPE A AG-5	Rewind the TAPE A	The top of tape
6	TAPE B AG-2	FWD play the TAPE B	2 minutes playing
7	TAPE B AG-3	F.F. the TAPE B	20 second FF or the end of tape
8	TAPE B AG-4	REV play the TAPE B	2 minutes playing
9	TAPE B AG-5	Rewind the TAPE B	The top of tape

2) Operation during aging mode
In the aging mode, the program is executed in the following sequence.
(1) Rewind is executed up to the top of tape A and B.
(2) A tape on FWD side is played for 2 minutes.
(3) FF is executed up to either made for 20 second or the end of tape.
(4) A tape is reversed, and the tape on REV side is played for 2 minutes.
(5) Rewind is executed up to the top of tape.
(6) Returns to step 2, and repeat steps from 2 to 5.

[Function Change Mode]
* elect either VIDEO or MD of the external FUNCTION input.

Procedure:
1. Turn on the power.
2. Press the two buttons [ENTER] and [I/⏻] at the same time.
The main power is turned on and the other function of the previous function is selected and displayed. "MD" or "VIDEO".

SECTION 5
MECHANICAL ADJUSTMENTS

Precaution

1. Clean the following parts with a denatured alcohol-moistened swab:
   - record/playback heads
   - erase head
   - capstan
   - pinch rollers
   - rubber belts
   - idlers
2. Demagnetize the record/playback head with a head demagnetizer.
3. Do not use a magnetized screwdriver for the adjustments.
4. After the adjustments, apply suitable locking compound to the parts adjusted.
5. The adjustments should be performed with the rated power supply voltage unless otherwise noted.

Torque Measurement

Mode	Torque meter	Meter reading
FWD	CQ-102C	31 to 71 g • cm (0.43 – 0.98 oz • inch)
FWD back tension	CQ-102C	2 to 6 g • cm (0.02 – 0.08 oz • inch)
REV	CQ-102RC	31 to 71 g • cm (0.43 – 0.98 oz • inch)
REV back tension	CQ-102RC	2 to 6 g • cm (0.02 – 0.08 oz • inch)
FF/REW	CQ-201B	71 to 143 g • cm (0.98 – 1.99 oz • inch)
FWD tension	CQ-403A	100 g or more (3.53 oz or more)
REV tension	CQ-403R	100 g or more (3.53 oz or more)

SECTION 6
ELECTRICAL ADJUSTMENTS

DECK SECTION 0 dB=0.775 V

1. Demagnetize the record/playback head with a head demagnetizer.
2. Do not use a magnetized screwdriver for the adjustments.
3. After the adjustments, apply suitable locking compound to the parts adjust.
4. The adjustments should be performed with the rated power supply voltage unless otherwise noted.
5. The adjustments should be performed in the order given in this service manual. (As a general rule, playback circuit adjustment should be completed before performing recording circuit adjustment.)
6. The adjustments should be performed for both L-CH and R-CH.
7. Switches and controls should be set as follows unless otherwise specified.

• Test Tape

Tape	Signal	Used for
P-4-A100	10 kHz, –10 dB	Azimuth Adjustment
WS-48B	3 kHz, 0 dB	Tape Speed Adjustment
P-4-L300	315 Hz, 0 dB	Level Adjustment

Record/Playback Head Azimuth Adjustment

DECK A **DECK B**

Note: Perform this adjustments for both decks

Procedure:

1. Mode: Playback

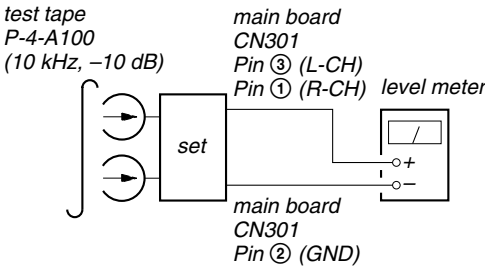

2. Turn the adjustment screw and check output peaks. If the peaks do not match for L-CH and R-CH, turn the adjustment screw so that outputs match within 1dB of peak.

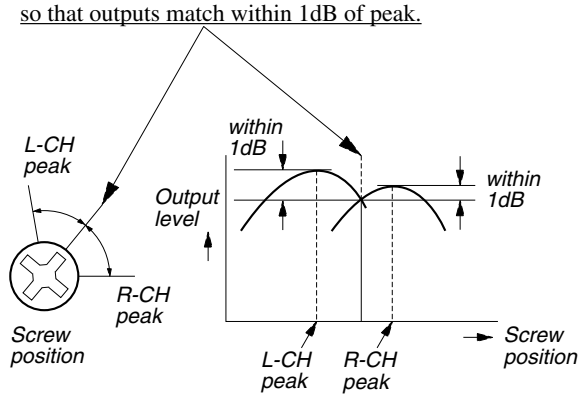

3. Mode: Playback

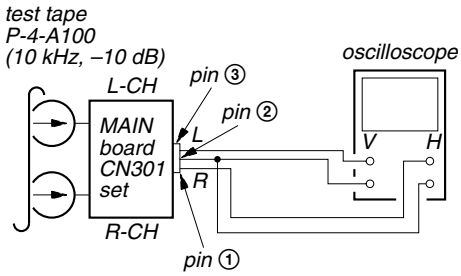

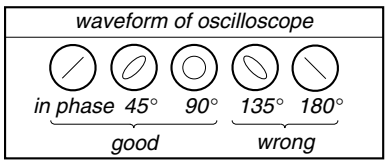

4. After the adjustments, apply suitable locking compound to the pats adjusted.

Adjustment Location: Playback Head (Deck A).
Record/Playback/Erase Head (Deck B).

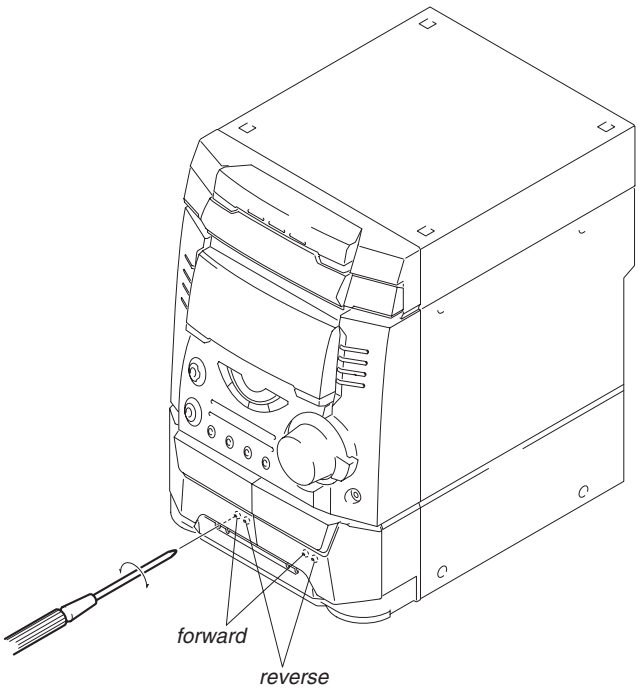

Tape Speed Adjustment DECK B

Note: Start the Tape Speed adjustment as below after setting to the test mode.
In the test mode, the tape speed is high during pressing the SD SYNC HI-DUB button.

Procedure:

1. Turn the power switch on.
2. Press the ■ button, ENTER button and DISC 3 button simultaneously.
(The "TEST MODE" on the fluorescent indicator tube display while in the test mode.)
To exit from the test mode, press the I/⏻ button.

Mode: Playback

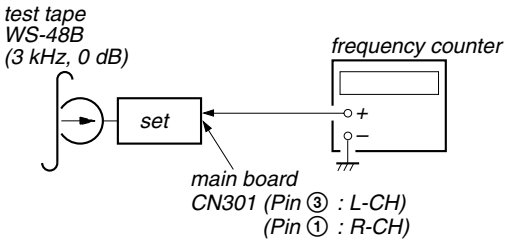

1. Insert the WS-48B into the deck B.
2. Press the ◁▷ button on the deck B.
3. Press the SD SYNC HI-DUB button in playback mode.
Then at HIGH speed mode.
4. Adjust RV1001 on the LEAF SW board do that frequency counter reads 6,000 ± 30 Hz.
5. Press the SD SYNC HI-DUB button.
Then back to NORMAL speed mode.
6. Adjust RV1002 on the LEAF SW board so that frequency counter reads 3,000 ± 15 Hz.

Adjustment Location: LEAF SW board

Playback level Adjustment DECK A DECK B

Procedure:

Mode: Playback

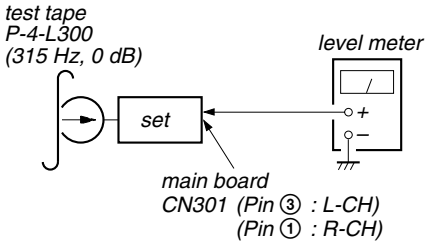

Deck A is RV302 (L-CH) and RV352 (R-CH), Deck B is RV303 (L-CH) and RV353 (R-CH) so that adjustment within adjustment level as follows.

Adjustment Level:

CN301 PB level: 301.5 to 338.3 mV (–8.2 to –7.2 dB) level difference between the channels: within ±0.5 dB

Adjustment Location: MAIN board

Sample Volue of Wow and Flutter: 0.3% or less W. RMS
(WS-48B)

REC Bias Adjustment DECK B

Procedure:

INTRODUCTION

When set to the test mode performed in Tape Speed Adjustment, when the tape is rewound after recording, the "REC memory mode" which rewinds only the recorded portion and playback is set.

This "REC memory mode" is convenient for performing this adjustment. During recording, the input signal FUNCTION will automatically switch to VIDEO.

(If do not operation of stopped from recording complete, and rotette of shuttle knob then rewind to recording start position.)

1. Press MD/VIDEO button to select VIDEO. (This step is not necessary if the above test mode has already been set.)
2. Insert a tape into deck B.
3. After press REC PAUSE/START button, press REC PAUSE/START button, then recording start.
4. Mode: Record

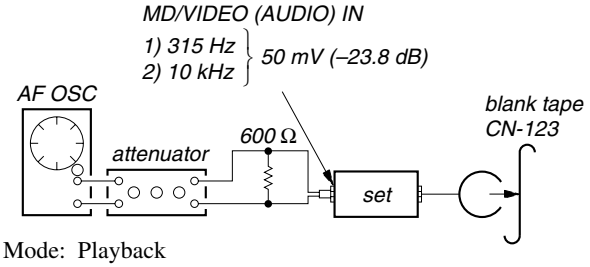

5. Mode: Playback

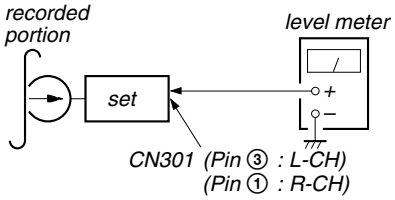

6. Confirm playback the signal recorded in step 3 become adjustable level as follows.
   If these levels do not adjustable level, adjustment the RV304 (L-CH) and RV354 (R-CH) on the AUDIO board to repeat steps 4 and 5.

Adjustable level: Playback output of 315 Hz to playback output of 10 kHz: ±1.0 dB

Adjustment Location: MAIN board

REC Level Adjustment DECK B

Procedure:

INTRODUCTION

When set to the test mode performed in Tape Speed Adjustment, when the tape is rewound after recording, the "REC memory mode" which rewinds only the recorded portion and playback is set.

This "REC memory mode" is convenient for performing this adjustment. During recording, the input signal FUNCTION will automatically switch to VIDEO.

(If do not operation of stopped from recording complete, and rotate of shuttle knob then rewind to recording start position.)

1. Press MD/VIDEO button to select VIDEO. (This step is not necessary if the above test mode has already been set.)
2. Insert a tape into deck B.
3. After press REC PAUSE/START button, press REC PAUSE/START button, then recording start.
4. Mode: Record

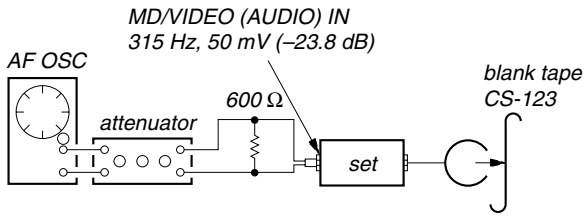

5. Mode: Playback

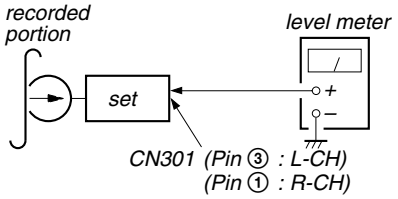

6. Confirm playback the signal recorded in step 3 become adjustable level as follows.
   If these levels do not adjustable level, adjustment the RV301 (L-CH) and RV351 (R-CH) on the MAIN board to repeat steps 4 and 5.

Adjustable level:

CN301 PB level: 47.2 to 53.0 mV (–24.3 to –23.3 dB)

Adjustment Location: MAIN board

[MAIN BOARD] (Component Side)

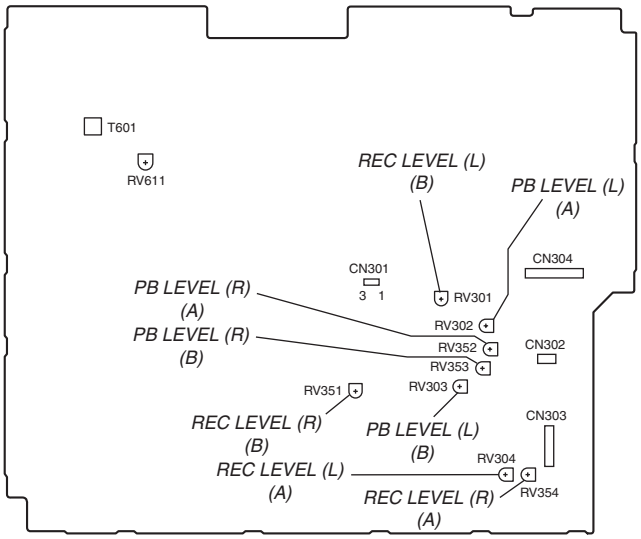

[LEAF SW BOARD] (Component Side)

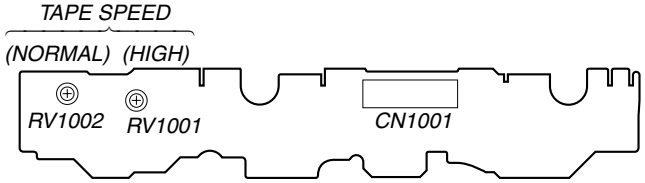

FM Tuned Level Adjustment

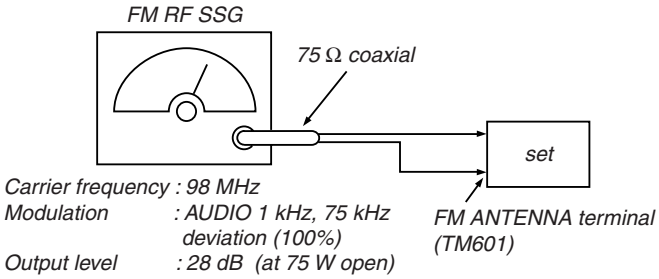
FM RF SSG
75 Ω coaxial
set
Carrier frequency : 98 MHz
Modulation : AUDIO 1 kHz, 75 kHz deviation (100%)
Output level : 28 dB (at 75 W open)
FM ANTENNA terminal (TM601)

Procedure:

1. Supply a 28 dB 98 MHz signal from the ANTENNA terminal.
2. Tune the set to 98 MHz.
3. Adjust RV611 to the point (moment) when the TUNED indicator will change from going off to going on.

Adjustment Location: MAIN board

Null Adjustment

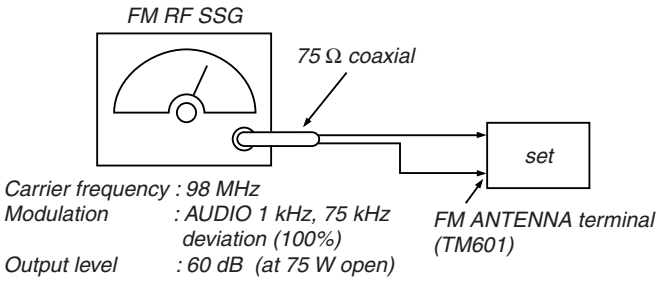
FM RF SSG
75 Ω coaxial
set
Carrier frequency : 98 MHz
Modulation : AUDIO 1 kHz, 75 kHz deviation (100%)
Output level : 60 dB (at 75 W open)
FM ANTENNA terminal (TM601)

Procedure:

1. Supply a 60 dB 98 MHz signal from the ANTENNA terminal.
2. Tune the set to 98 MHz.
3. Measure voltage between pin 21 of IC 601. Adjust T601 ubtil the voltage becomes 0 V.

Adjustment Location: MAIN board

Adjustment Location

[MAIN BOARD] Component side

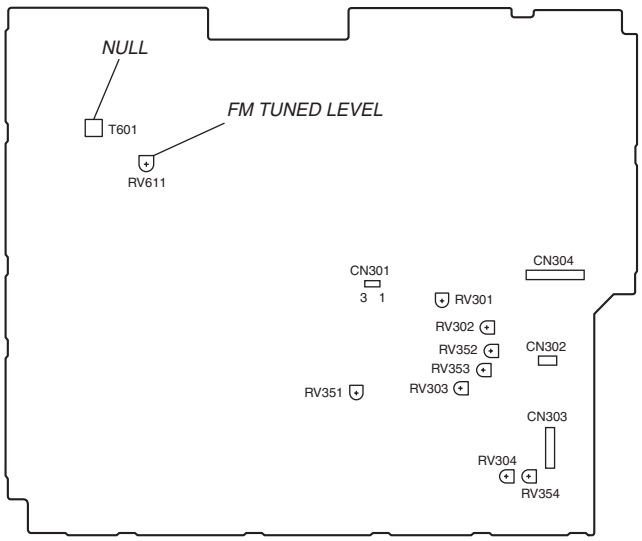

CD SECTION

Note :

1. CD Block is basically designed to operate without adjustment. Therefore, check each item in order given.
2. Use YEDS-18 disc (3-702-101-01) unless otherwise indicated.
3. Use an oscilloscope with more than 10MΩ impedance.
4. Clean the object lens by an applicator with neutral detergent when the signal level is low than specified value with the following checks.

S-Curve Check

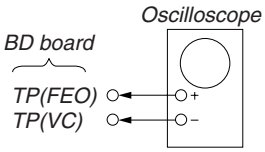

Procedure :

1. Connect oscilloscope to TP (FEO).
2. Connect between TP (FEI) and TP (VC) by lead wire.
3. Connect between TP (AGCCON) and TP (GND) by lead wire.
4. Turn Power switch on.
5. Load a disc (YEDS-18) and actuate the focus search. (In consequence of open and close the disc tray, actuate the focus search)
6. Confirm that the oscilloscope waveform (S-curve) is symmetrical between A and B. And confirm peak to peak level within 4 ±1 Vp-p.

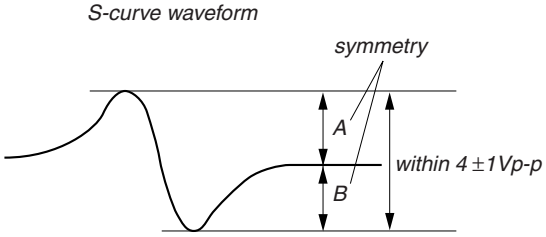

7. After check, remove the lead wire connected in step 2 and 3.

Note :
- Try to measure several times to make sure than the ratio of A : B or B : A is more than 10 : 7.
- Take sweep time as long as possible and light up the brightness to obtain best waveform.

RF Level Check

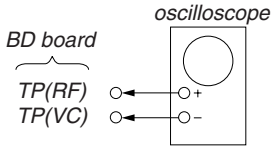

Procedure :

1. Connect oscilloscope to TP (RF).
2. Connect between TP (AGCCON) and TP (GND) by lead wire.
3. Turned Power switch on.
4. Load a disc (YEDS-18) and playback.
5. Confirm that oscilloscope waveform is clear and check RF signal level is correct or not.
6. After check, remove the lead wire connected in step 2.

Note : Clear RF signal waveform means that the shape " ◊ " can be clearly distinguished at the center of the waveform.

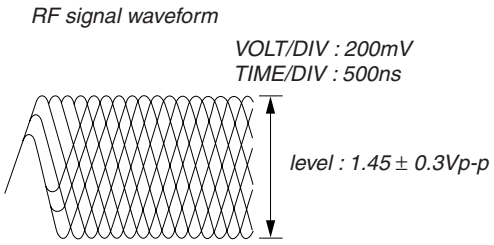

E-F Balance (1 Track jump) Check

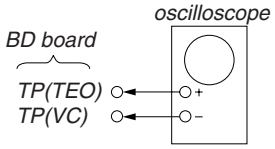

Procedure :

1. Connect oscilloscope to TP (TEO) and TP (VC).
2. Turned Power switch on.
3. Load a disc (YEDS-18) and playback the number five track.
4. Press the ◁▷ button. (Becomes the 1 track jump mode.)
5. Confirm that the level B and A (DC voltage) on the oscilloscope waveform.

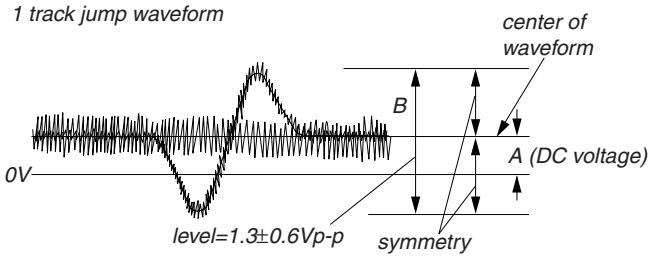

Specified level: $\frac{A}{B} \times 100$=less than ±22%

6. After check, remove the lead wire connected in step 1.

RF PLL Free-run Frequency Check

Procedure :

1. Connect frequency counter to test point (XPCK) with lead wire.

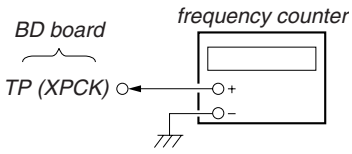

2. Turned Power switch on.
3. Put the disc (YEDS-18) in to play the number five track. Confirm that reading on frequency counter is 4.3218MHz.

Adjustment Location:

[BD BOARD] (Conductor Side)

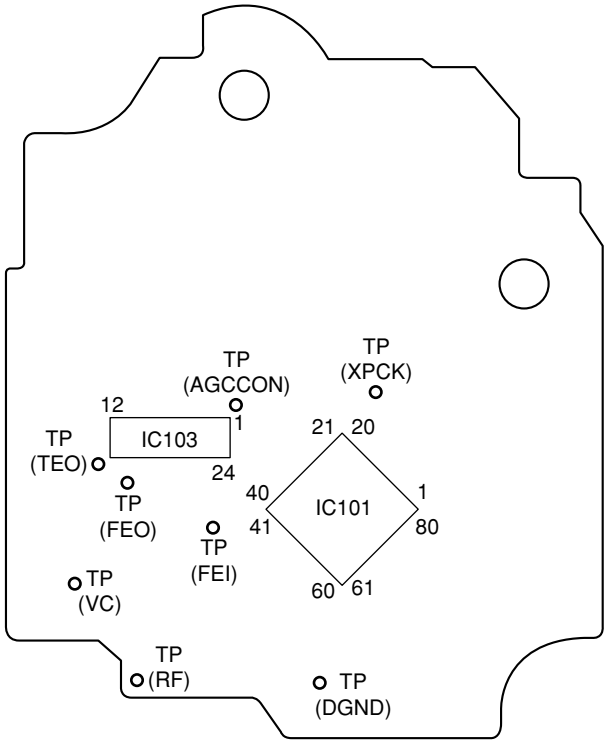

SECTION 7
DIAGRAMS

THIS NOTE IS COMMON FOR PRINTED WIRING BOARDS AND SCHEMATIC DIAGRAMS.
(In addition to this, the necessary note is printed in each block.)

Note on Schematic Diagram:

- All capacitors are in μF unless otherwise noted. pF: μμF 50 WV or less are not indicated except for electrolytics and tantalums.
- All resistors are in Ω and 1/4 W or less unless otherwise specified.
- △ : internal component.
- ▭ : panel designation.

Note:	**Note:**
The components identified by mark ⚠ or dotted line with mark ⚠ are critical for safety. Replace only with part number specified.	Les composants identifiés par une marque ⚠ sont critiques pour la sécurité. Ne les remplacer que par une piéce portant le numéro spécifié.

- B+ : B+ Line.
- B− : B– Line.
- ▭ : adjustment for repair.
- Voltages and waveforms are dc with respect to ground under no-signal (detuned) conditions.
- Voltages are taken with a VOM (Input impedance 10 MΩ). Voltage variations may be noted due to normal production tolerances.
- Waveforms are taken with a oscilloscope. Voltage variations may be noted due to normal production tolerances.
- Circled numbers refer to waveforms.
- Signal path.
  - ⇨ : FM
  - ➡ : AM
  - ⇨ : PB (DECK A)
  - ⇨ : PB (DECK B)
  - ⇨ : REC (DECK B)
  - ⇨ : CD
  - ⇨ : digital out
- Abbreviation
  - CND : Canadian model
  - AUS : Australian model
  - G : German model
  - AED : North European model
  - EA : Saudi Arabia model
  - MY : Malaysia model
  - SP : Singapore model
  - TH : Thai model
  - TW : Taiwan model
  - KR : Korea model
  - MX : Mexican model
  - AR : Argentina model

Note on Printed Wiring Boards:

- ○——— : parts extracted from the component side.
- ▒▒▒ : Pattern from the side which enables seeing.
- Indication of transistor.

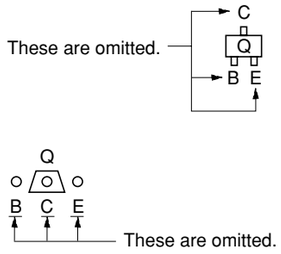

7-1. CIRCUIT BOARD LOCATION

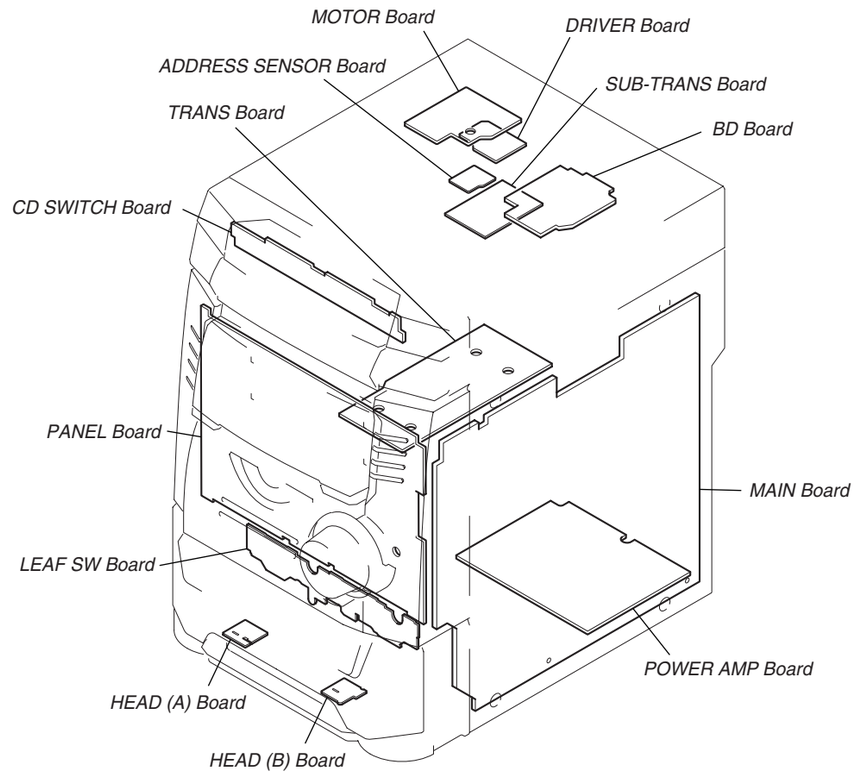

• WAVEFORMS

– BD BOARD –

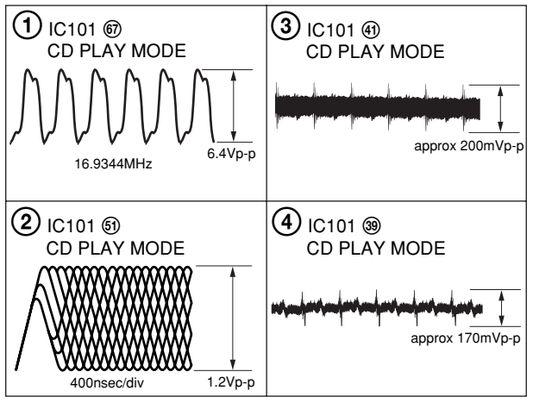

– MAIN BOARD –

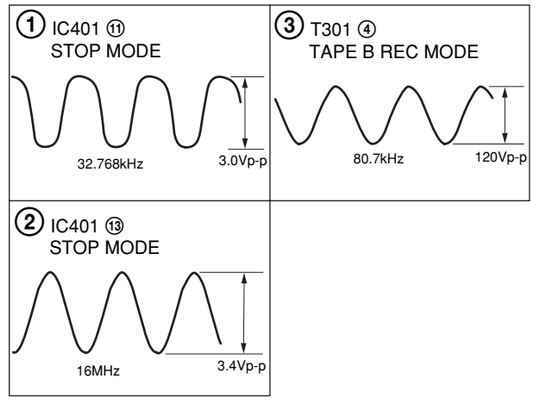

– PANEL BOARD –

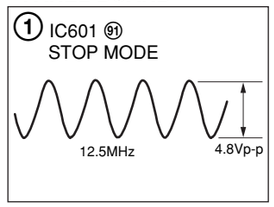

7-2. BLOCK DIAGRAMS
TUNER/CD SECTION

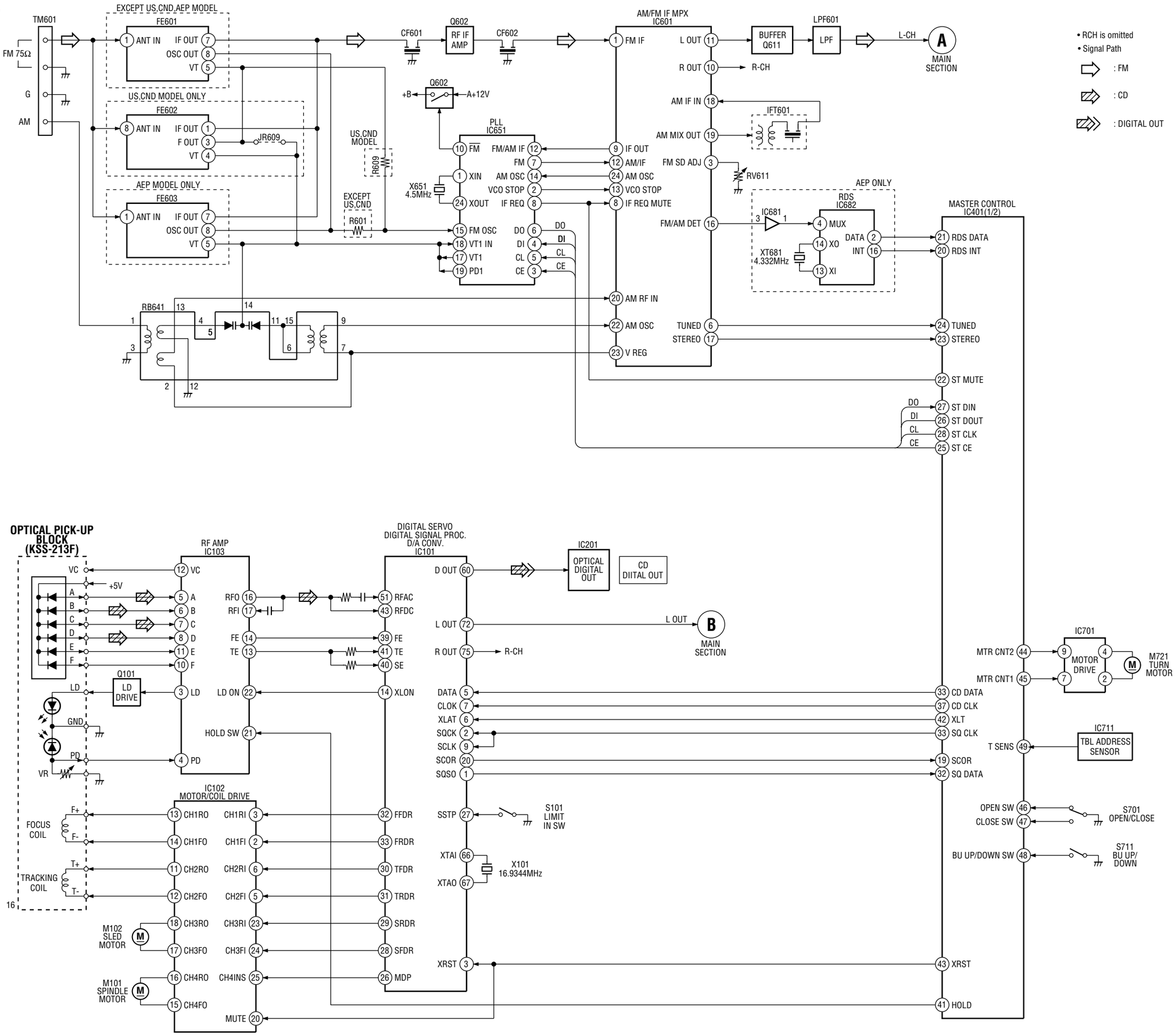

MAIN SECTION

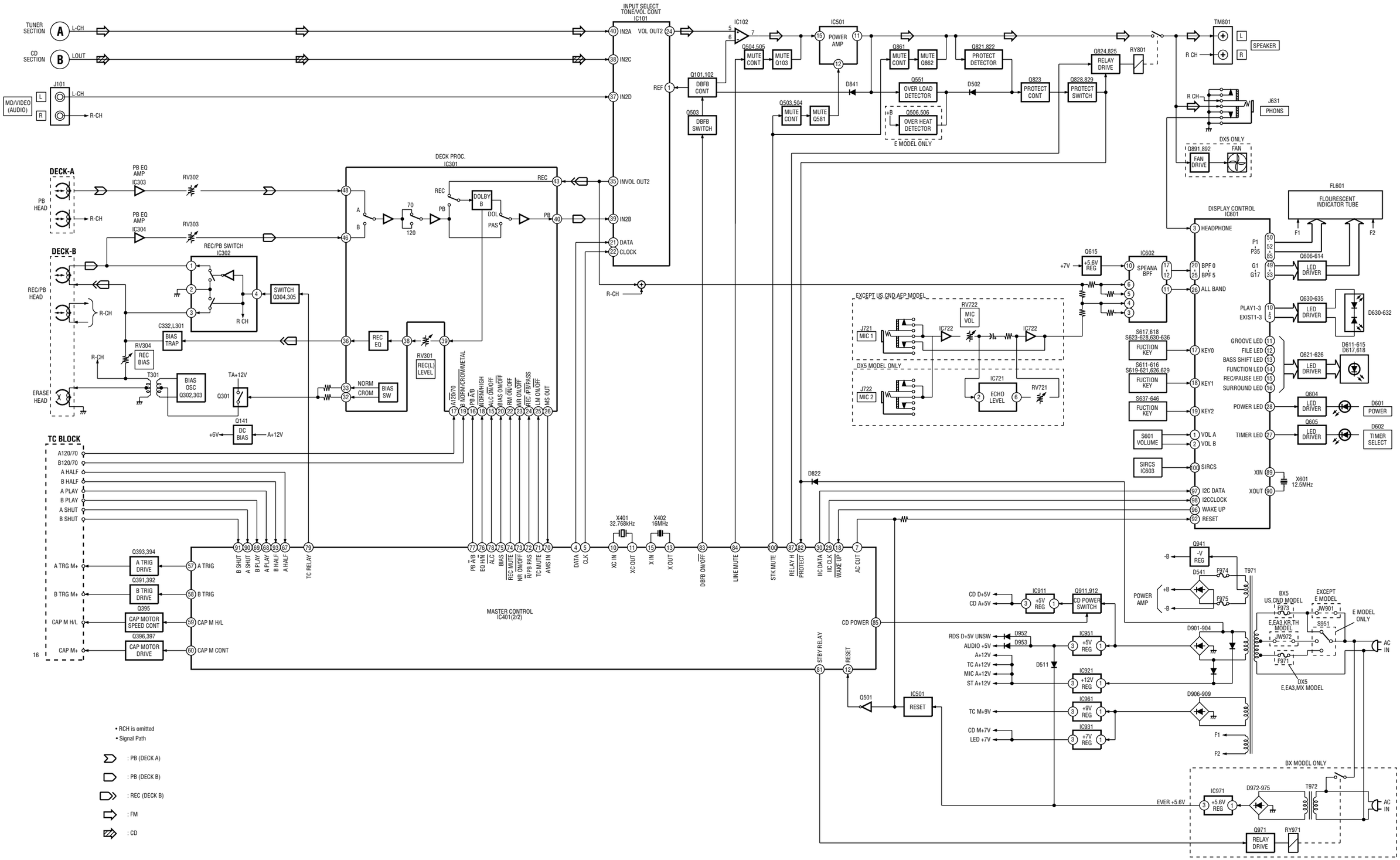

7-3. PRINTED WIRING BOARD BD SECTION

• See page page 21 for Circuit Boards Location.

• Semiconductor Location

Ref. No.	Location
IC101	D-2
IC102	C-4
IC103	B-3
Q101	A-4

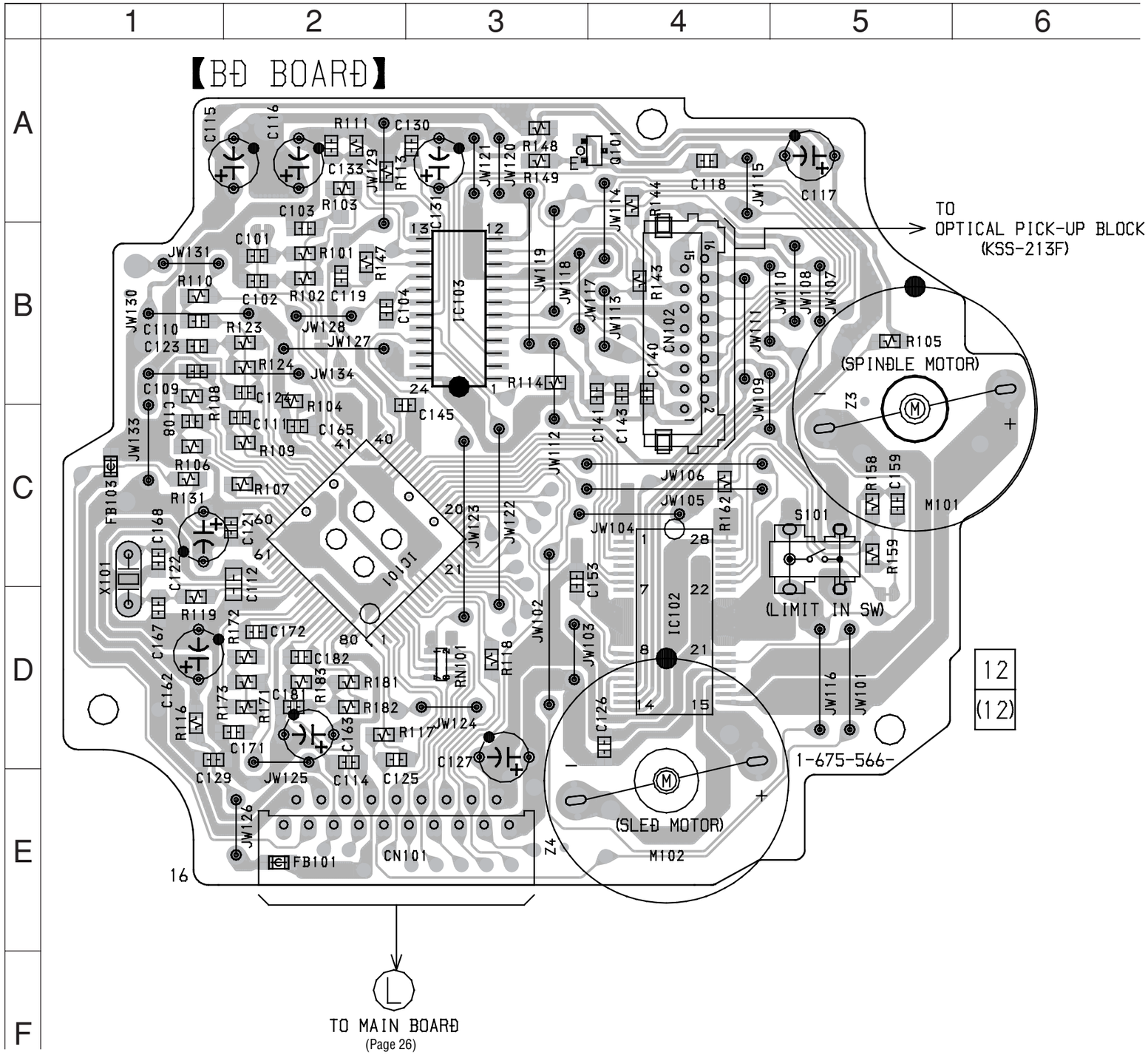

7-4. SCHEMATIC DIAGRAM BD SECTION

• See page page 21 for Wavefoms.
• See page page 42 for IC Block Diagrams.

【BD BOARD】

IC101
DIGITAL SERVO, DIGITAL SIGNAL PROCESSOR & Ð/A CONVERTER
IC101 CXÐ2587Q

IC103
RF AMP
IC103 CXA2568M-T

IC102
MOTOR ÐRIVER
IC102 BA5974FP-E

Q101 MSB710-RT1

S101 LIMIT IN SW

CN102 16P — TO OPTICAL PICK-UP BLOCK (KSS-213F)

CN101 19P — TO MAIN BOARÐ (Page 29)

M102 (SLEÐ MOTOR)

M101 (SPINÐLE MOTOR)

The components identified by mark ⚠ or dotted line with mark ⚠ are critical for safety. Replace only with part number specified.	Les composants identifiés par une marque ⚠ sont critiques pour la sécurité. Ne les remplacer que par une pièce portant le numéro spécifié.

7-5. PRINTED WIRING BOARD MAIN SECTION

• See page page 21 for Circuit Boards Location.

• **Semiconductor Location**

Ref. No.	Location
D501	B-3
D502	B-4
D503	A-4
D504	B-3
D505	A-3
D506	A-4
D508	C-1
D509	B-3
D510	B-3
D511	C-1
D601	B-7
D641	C-9
D651	B-7
D681	C-7
D801	F-8
D822	E-8
D861	F-6
D891	F-8
D892	F-8
D901	F-7
D902	F-7
D903	F-7
D904	F-7
D906	G-7
D907	G-7
D908	G-7
D909	G-7
D910	G-5
D911	G-5
D952	E-5
D953	E-5
D957	
IC104	B-5
IC101	D-6
IC102	C-4
IC302	F-3
IC303	E-2
IC304	F-3
IC301	E-4
IC401	B-3
IC501	B-4
IC601	C-8
IC651	A-7
IC681	C-7
IC682	D-7
IC911	B-6
IC951	E-5
IC961	F-6
Q101	C-5
Q102	C-4
Q103	G-6
Q141	C-4
Q151	C-5
Q152	C-5
Q153	G-6
Q301	G-4
Q302	G-3
Q303	G-4
Q304	F-3
Q305	F-4
Q391	D-2
Q392	D-2
Q393	D-2
Q394	C-2
Q395	D-2
Q396	D-2
Q397	C-2
Q501	B-4
Q503	C-3
Q504	C-3
Q505	C-3
Q601	B-7
Q602	A-8
Q611	C-7
Q612	C-7
Q821	F-8
Q822	F-8
Q823	E-8
Q824	E-8
Q825	E-8
Q828	E-8
Q829	E-8
Q861	F-6
Q862	F-8
Q863	E-7
Q891	E-8
Q892	E-8
Q911	C-6
Q912	C-6

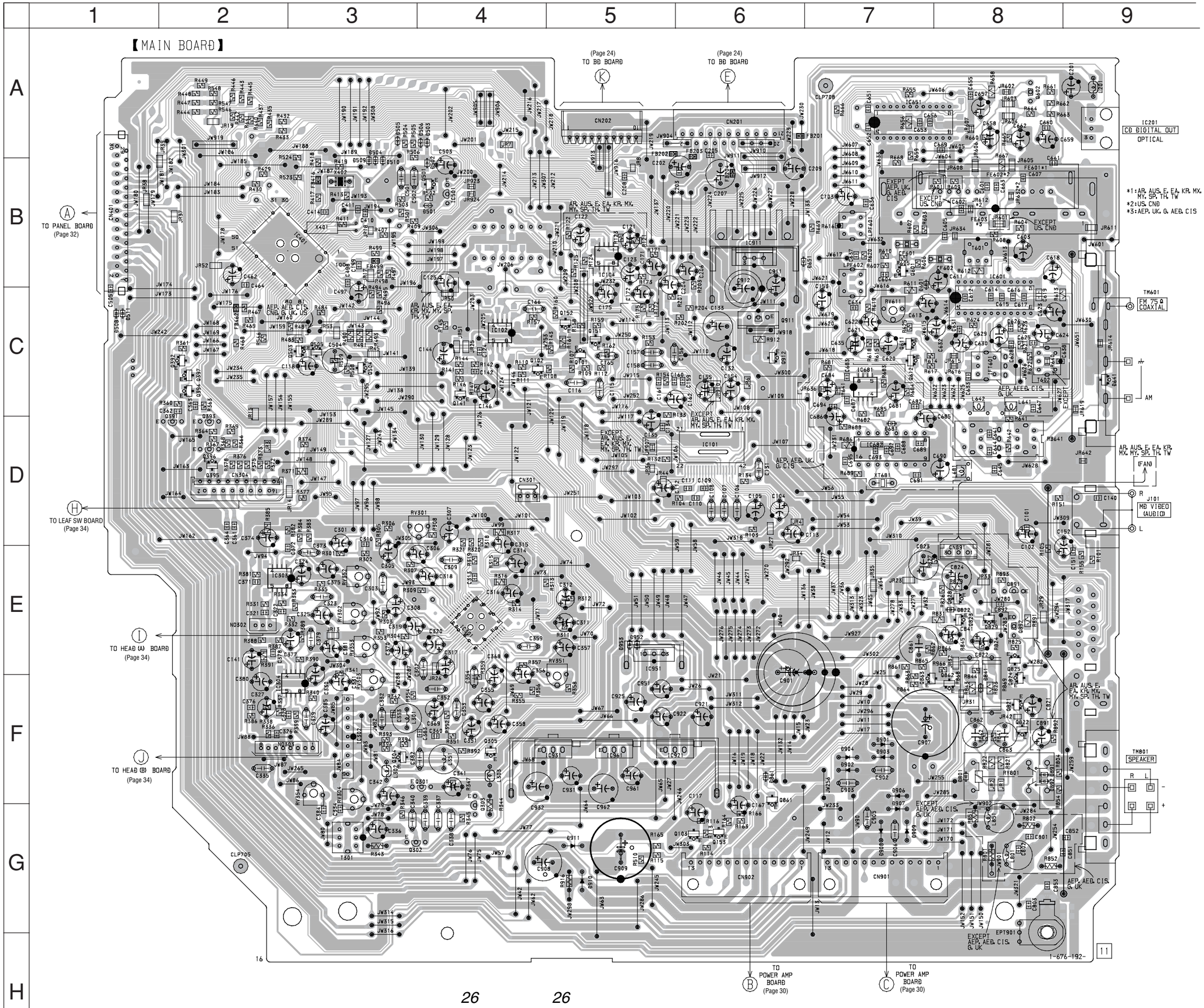

7-6. SCHEMATIC DIAGRAM MAIN SECTION (1/3)

• See page page 44 for IC Block Diagrams.

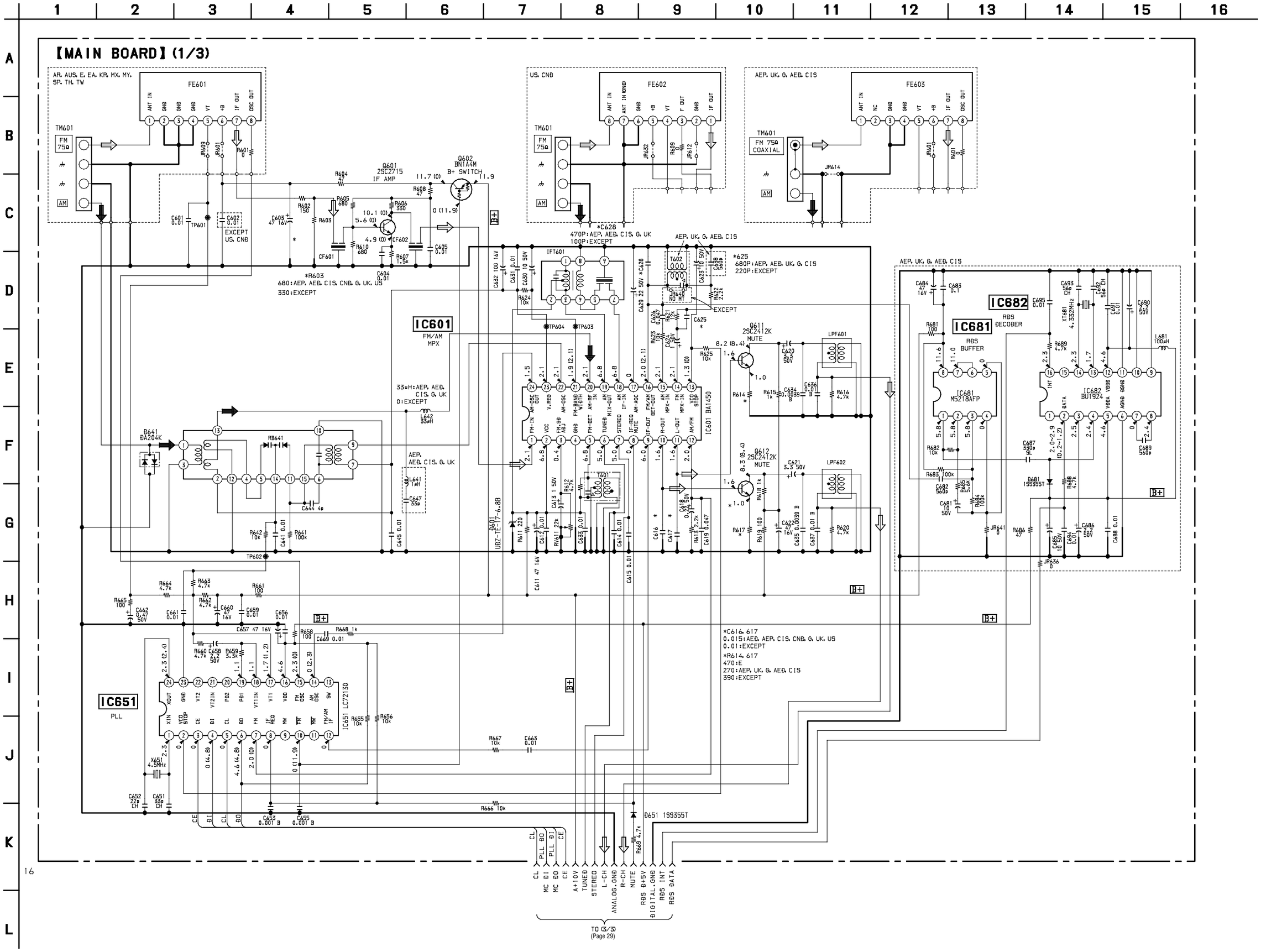

7-7. SCHEMATIC DIAGRAM MAIN SECTION (2/3)

- See page page 21 for Waveforms.
- See page page 40 for IC Pin Function Description.
- See page page 44 for IC Block Diagrams.

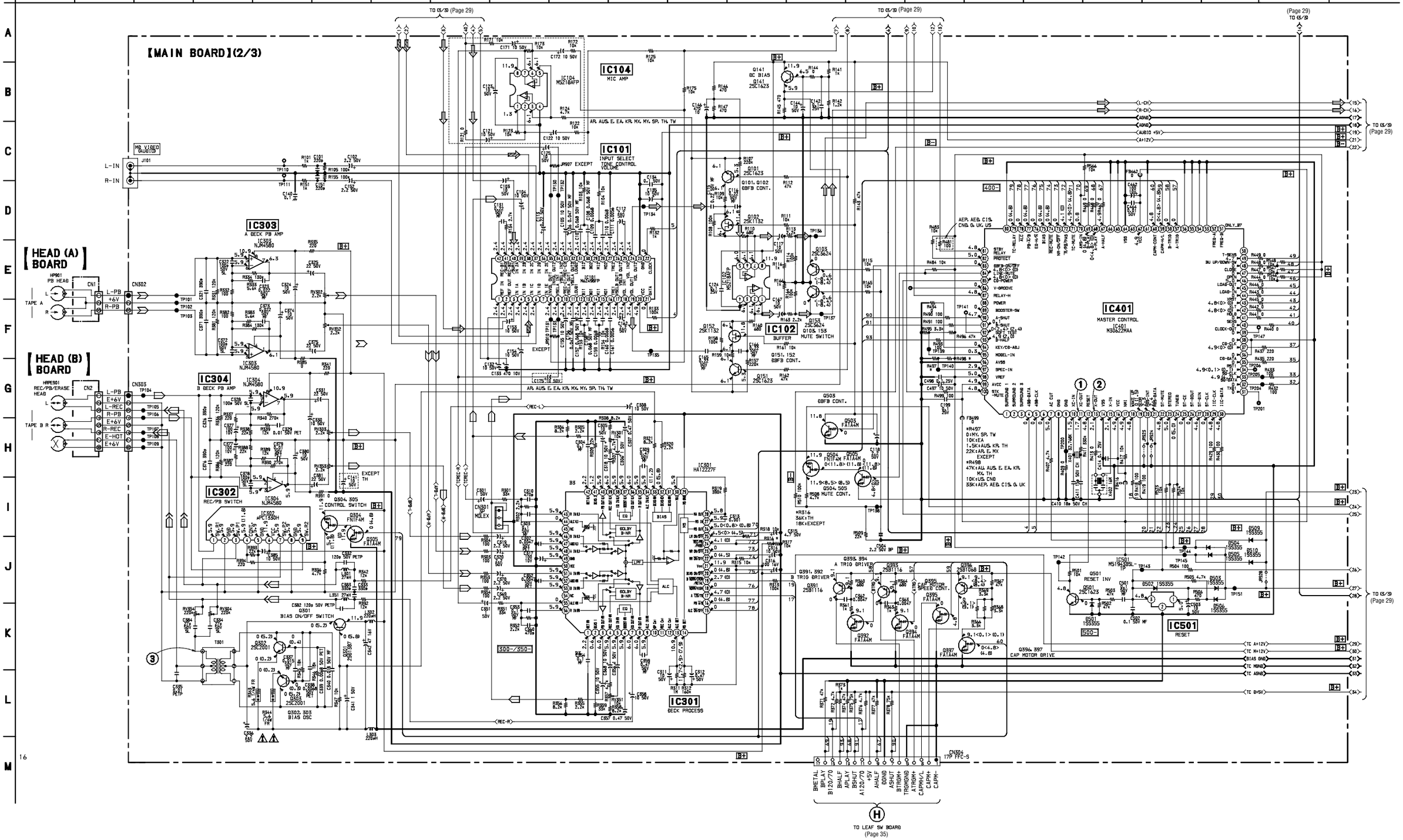

7-8. SCHEMATIC DIAGRAM MAIN SECTION (3/3)

• See page page 44 for IC Block Diagrams.

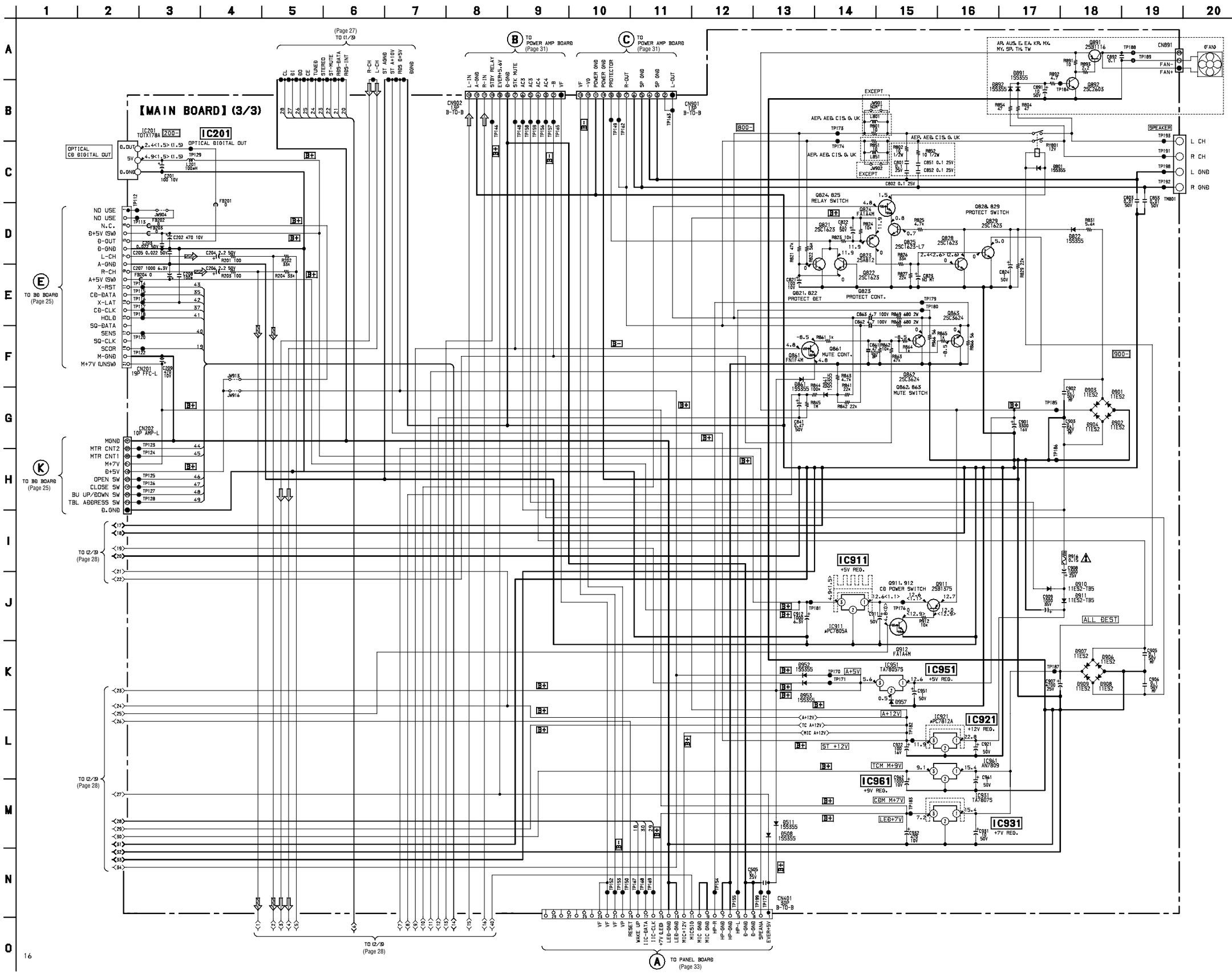

7-9. PRINTED WIRING BOARD POWER AMP SECTION

• See page page 21 for Circuit Boards Location.

• **Semiconductor Location**

Ref. No.	Location
D501	B-3
D502	C-2
D541	D-6
D551	B-2
D581	C-5
D941	E-5
D979	E-5
IC501	A-6
Q501	B-3
Q503	B-7
Q504	C-5
Q505	A-3
Q506	A-3
Q551	B-2
Q581	C-6
Q941	E-6

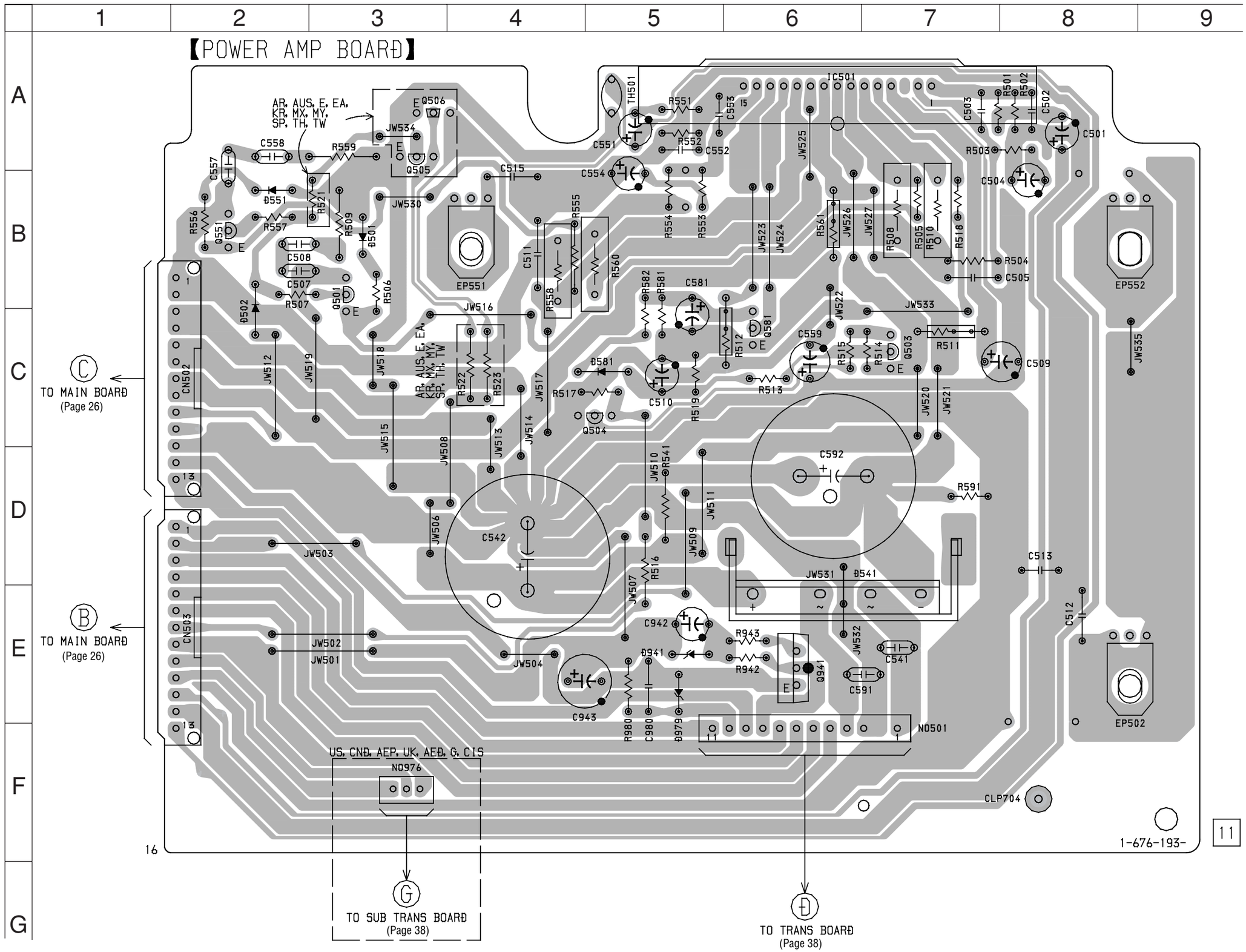

7-10. SCHEMATIC DIAGRAM POWER AMP SECTION

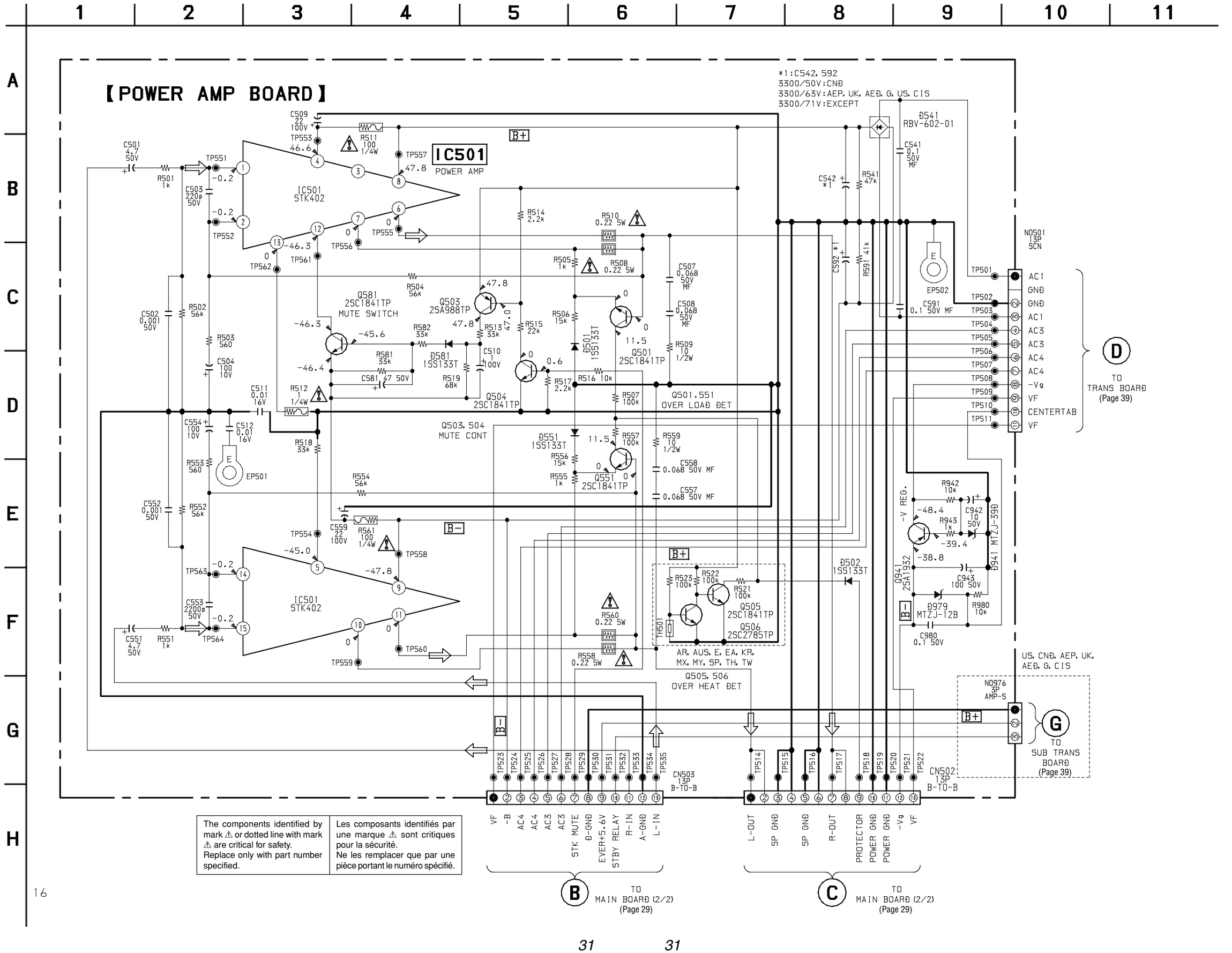

The components identified by mark ⚠ or dotted line with mark ⚠ are critical for safety. Replace only with part number specified.	Les composants identifiés par une marque ⚠ sont critiques pour la sécurité. Ne les remplacer que par une pièce portant le numéro spécifié.

7-11. PRINTED WIRING BOARD PANEL SECTION

• See page page 21 for Circuit Boards Location.

• **Semiconductor Location**

Ref. No.	Location
D601	B-8
D602	C-2
D603	D-3
D611	C-7
D612	E-7
D613	E-7
D614	F-7
D615	D-5
D617	G-4
D618	C-2
D630	A-6
D631	A-5
D632	A-4
IC601	C-5
IC602	F-4
IC603	B-7
IC721	E-8
IC722	F-8
Q604	D-8
Q605	B-2
Q606	D-7
Q607	D-7
Q608	C-7
Q609	C-7
Q610	C-7
Q611	C-7
Q612	C-7
Q613	C-6
Q614	C-6
Q615	D-3
Q621	B-7
Q622	E-7
Q623	F-7
Q624	E-5
Q625	F-4
Q626	C-2
Q630	A-7
Q631	A-7
Q632	A-4
Q633	A-7
Q634	A-7
Q635	A-3
Q721	G-6

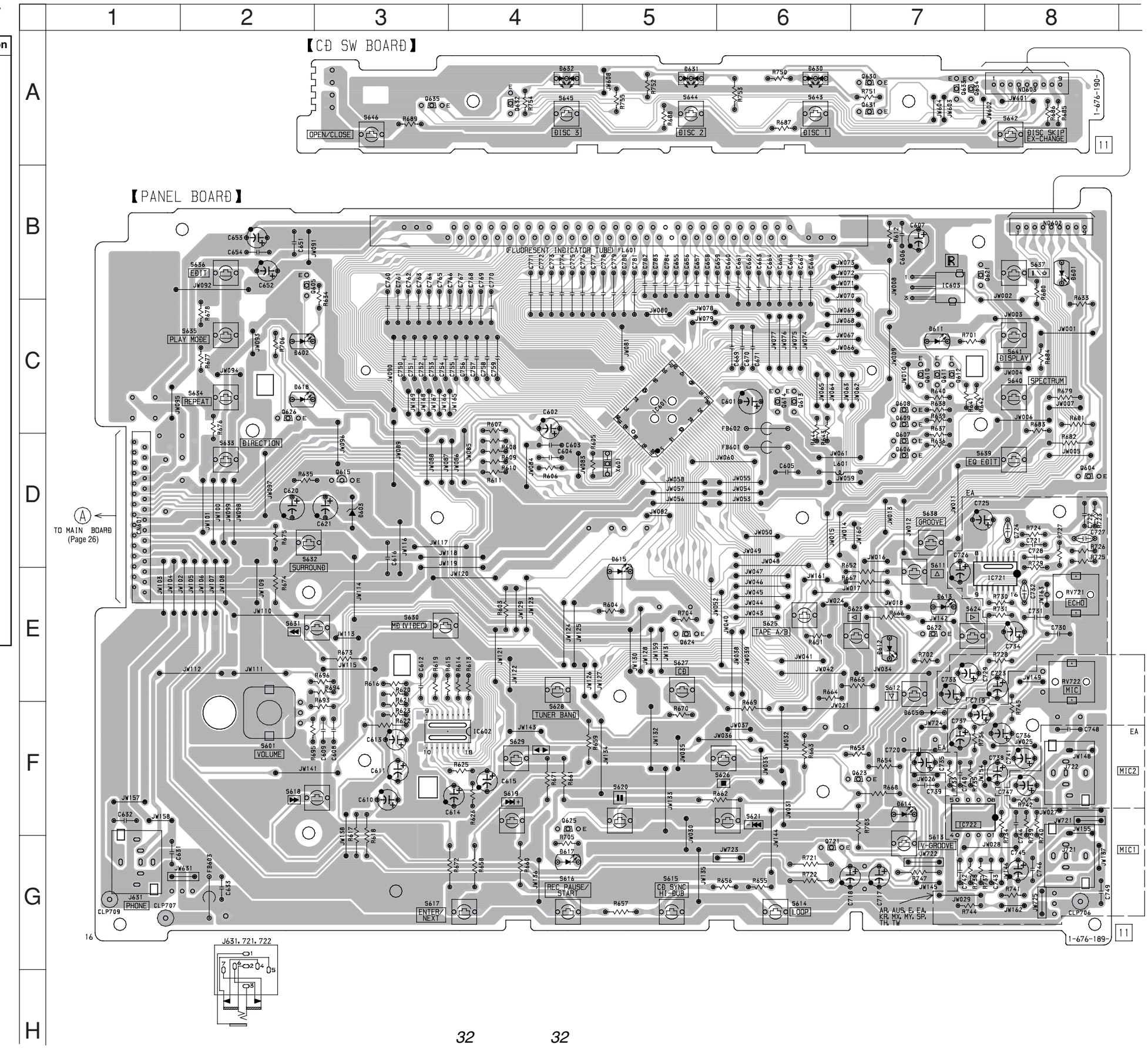

7-12. SCHEMATIC DIAGRAM PANEL SECTION

- See page page 21 for Wavefoms.
- See page page 41 for IC Pin Function Description.
- See page page 43 for IC Block Diagrams.

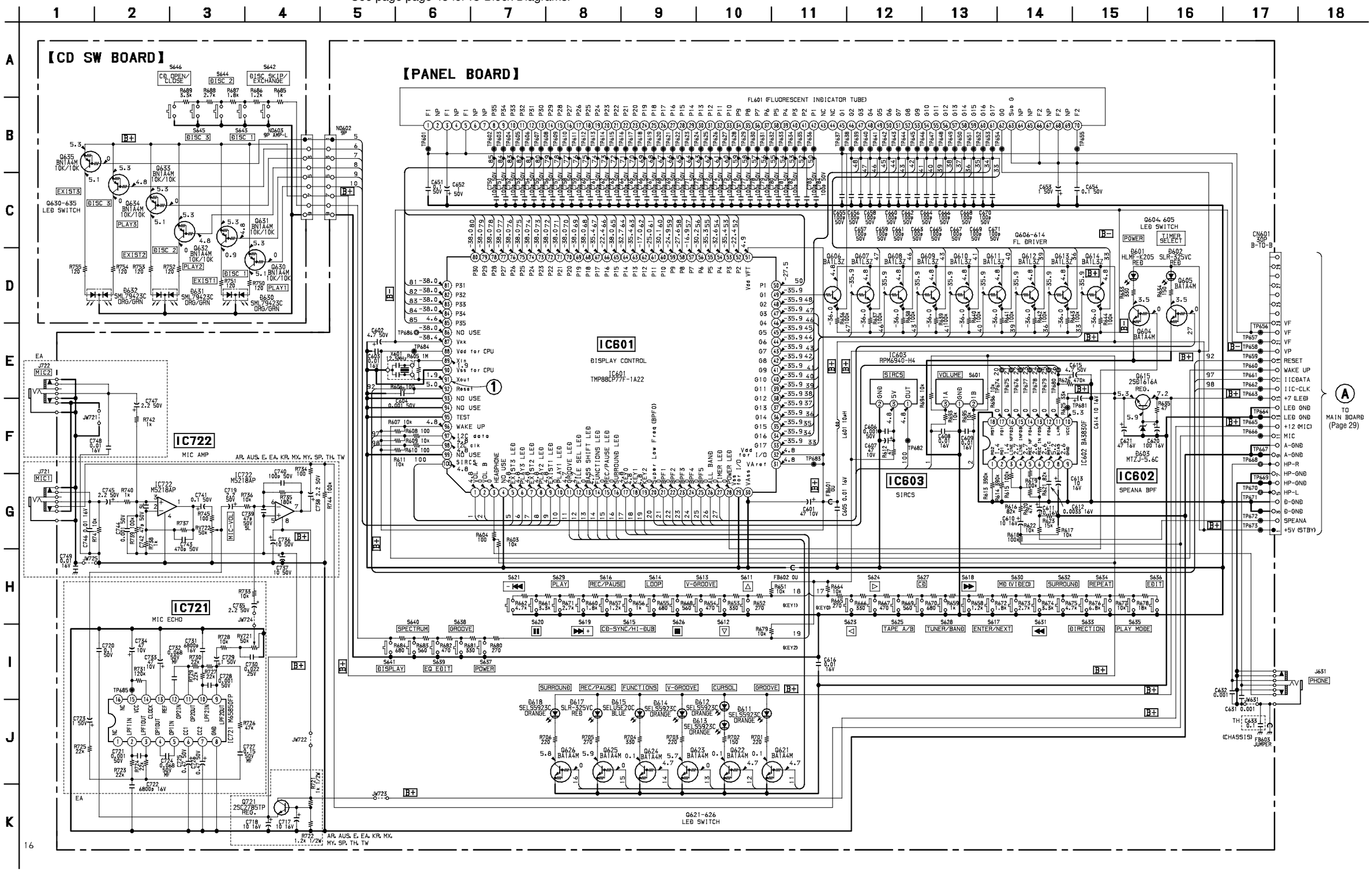

7-13. PRINTED WIRING BOARD LEAF SW SECTION

• See page page 21 for Circuit Boards Location.

• **Semiconductor Location**

Ref. No.	Location
D1001	A-2
D1002	A-5
IC1001	A-1
IC1002	A-5
Q1001	A-2

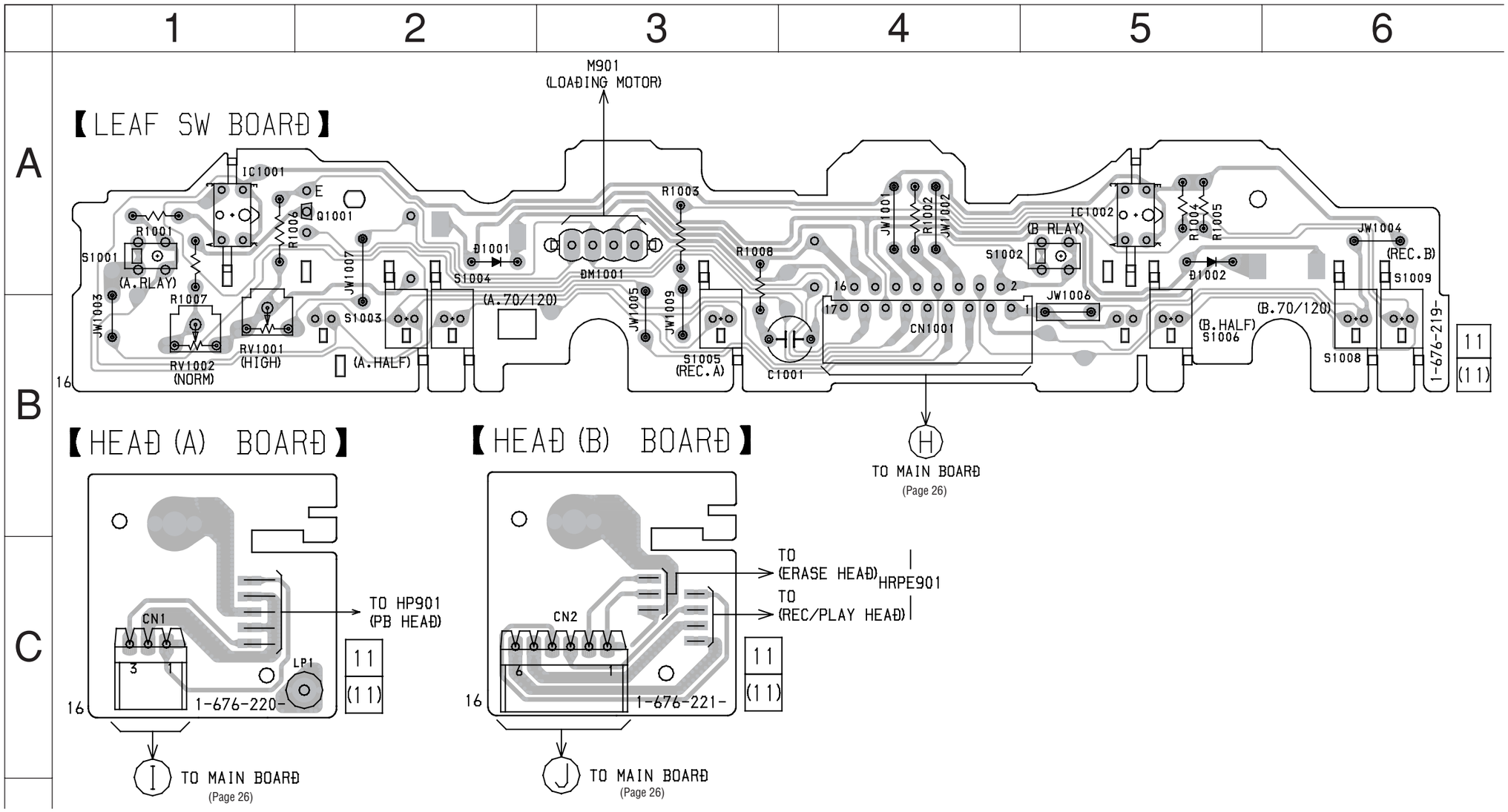

7-14. SCHEMATIC DIAGRAM LEAF SW SECTION

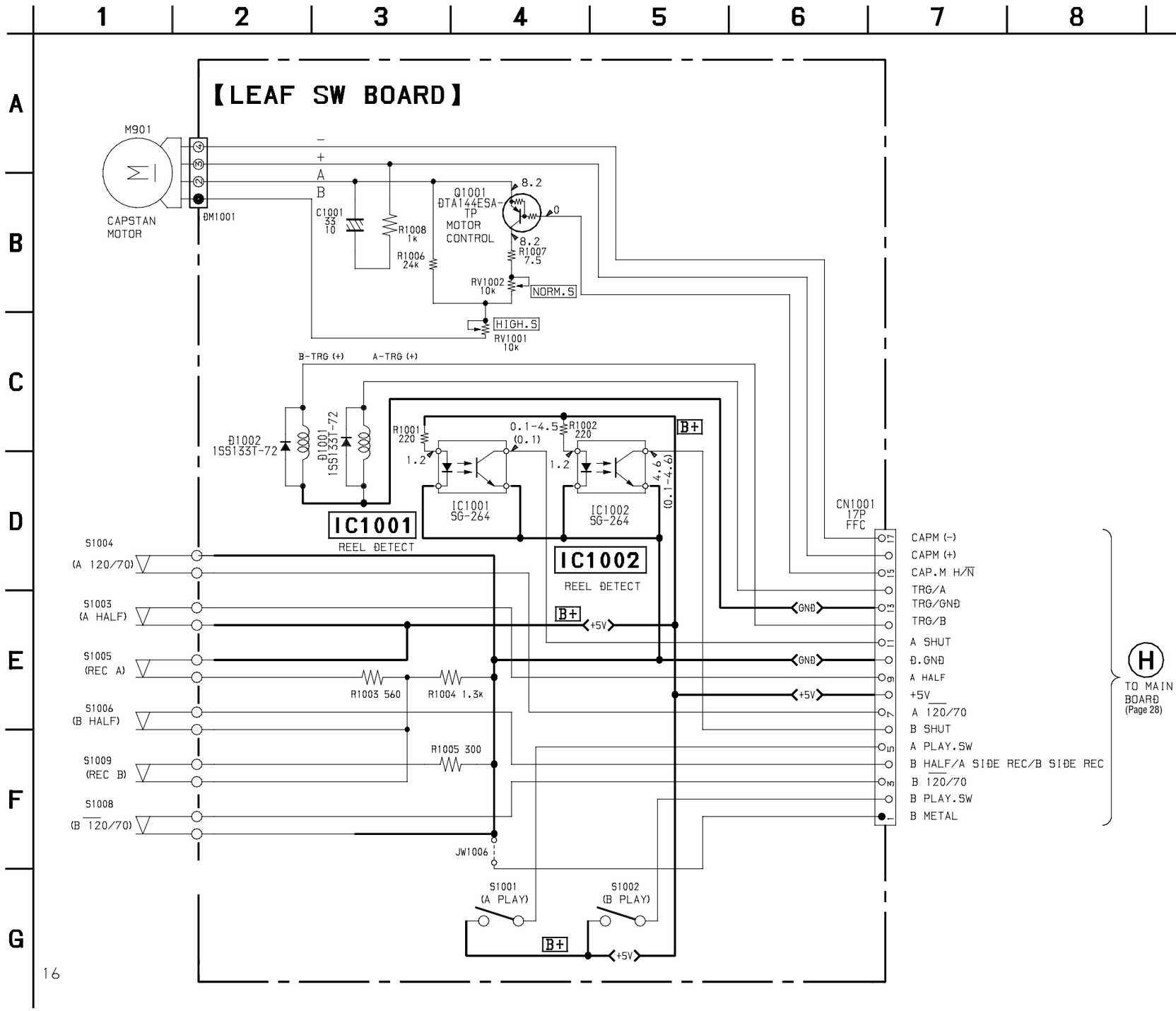

7-15. PRINTED WIRING BOARD DRIVER SECTION

• See page page 21 for Circuit Boards Location.

• Semiconductor Location

Ref. No.	Location
D701	E-1
IC701	E-1
IC711	B-5

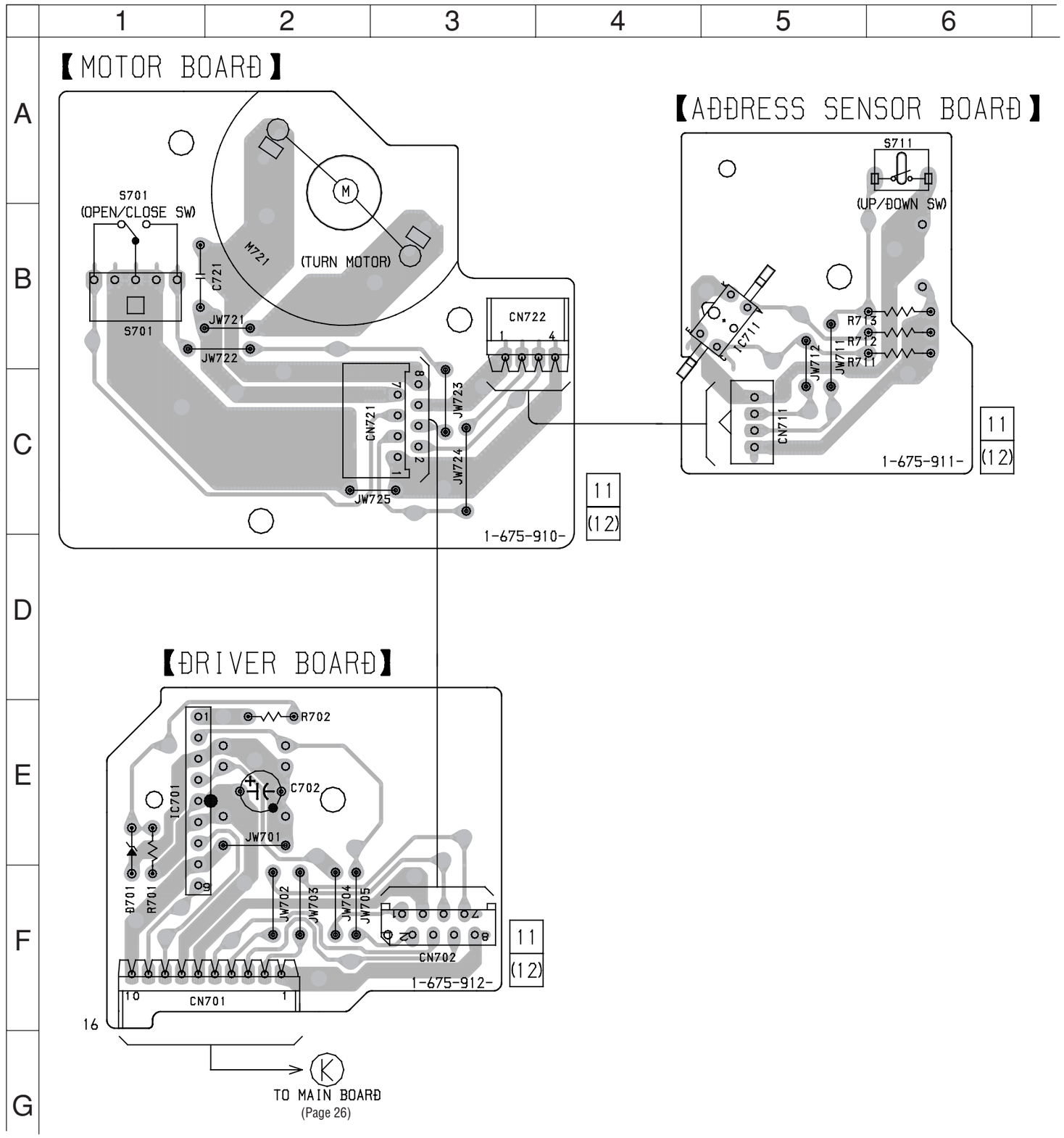

7-16. SCHEMATIC DIAGRAM DRIVER SECTION

• See page page 43 for IC Block Diagrams.

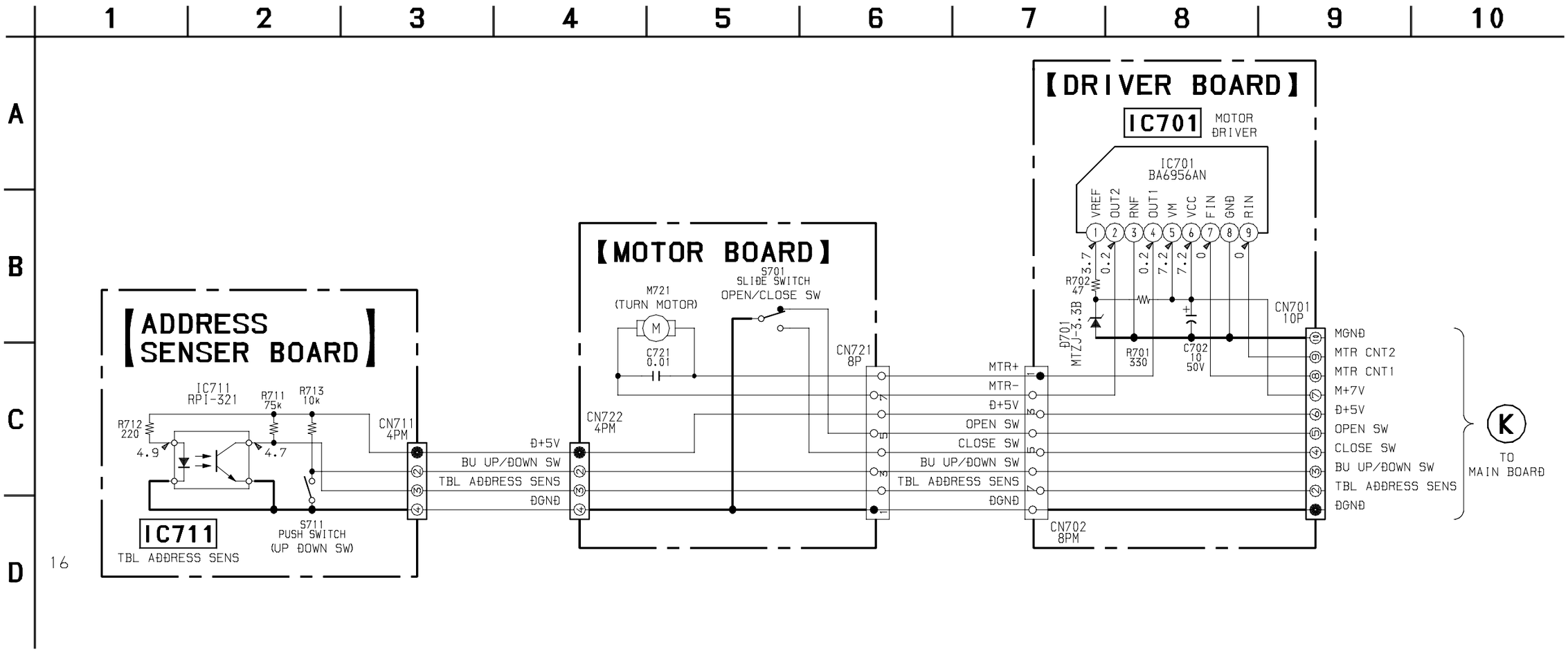

7-17. PRINTED WIRING BOARD TRANS SECTION

• See page page 21 for Circuit Boards Location.

• **Semiconductor Location**

Ref. No.	Location
D971	G-4
D972	G-3
D973	G-3
D974	G-4
D975	G-4
D976	G-5
D977	B-2
IC971	G-4
Q971	G-3

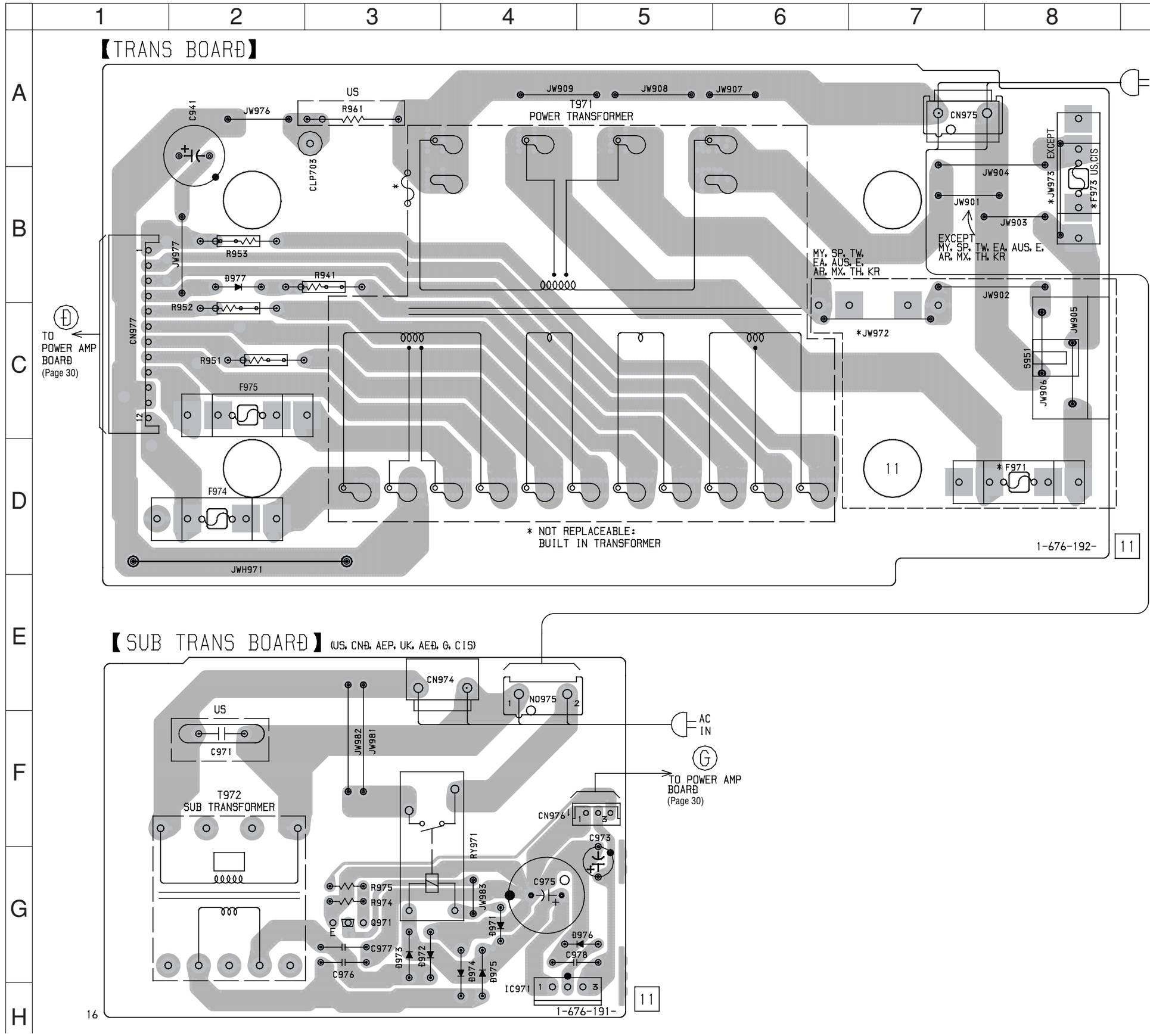

7-18. SCHEMATIC DIAGRAM TRANS SECTION

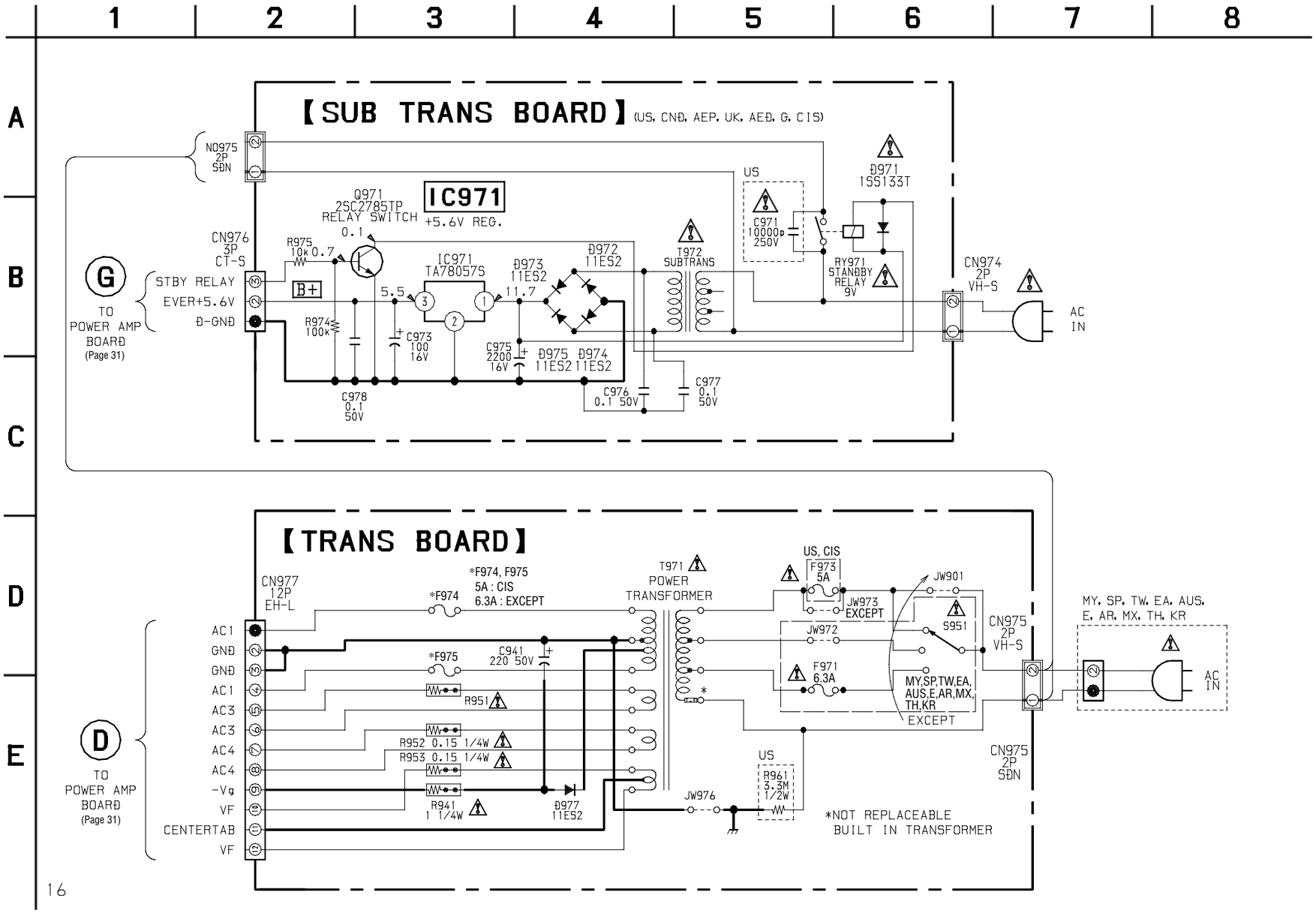

The components identified by mark ⚠ or dotted line with mark ⚠ are critical for safety. Replace only with part number specified.	Les composants identifiés par une marque ⚠ sont critiques pour la sécurité. Ne les remplacer que par une pièce portant le numéro spécifié.

7-19. IC PIN FUNCTION DESCRIPTION

• MAIN BOARD IC401 M30622MAA-A25FP (MASTER CONTROL)

Pin No.	Pin Name	I/O	Description
1	SURROUND 1	O	Not used.
2	SURROUND 2	O	Not used.
3	SURROUND 3	O	Not used.
4	498-DATA	O	Data signal output for IC101 (M61504FP)
5	498-CLK	O	Clock signal output for IC101 (M61504FP)
6	N.C	I	Not used.
7	AC-CUT	I	AC CUT ON (L) / OFF (H) CHECK
8	GND	—	Connected to ground.
9	GND	—	Connected to ground.
10	XC IN	I	SUB CLOCK input. (32.768kHz)
11	XC OUT	O	SUB CLOCK output. (32.768kHz)
12	RESET	I	System reset input.
13	X-OUT	O	MAIN SYSTEM CLOCK output. (16MHz)
14	VSS	—	Vss
15	X-IN	I	MAIN SYSTEM CLOCK input. (16MHz)
16	VCC	—	Power supply. (+5V)
17	NMI	I	PULL UP (EVER +5V)
18	WAKE_UP	I	WAKE UP signal input. (L)
19	SCOR	I	CD Q-data request signal input.
20	RDS-INT	I	RDS interrupt signal input.
21	RDS-DATA	I	RDS data signal input.
22	ST-MUTE	O	Tuner mute signal output.
23	STEREO	I	STEREO detect signal input. L=ON, H=OF
24	TUNED	I	TUNED detect signal input. L=ON, H=OFF
25	ST-CE	O	TUNER chip eneble output.
26	ST-DOUT	O	TUNER data output.
27	ST-DIN	I	TUNER data input.
28	ST-CLK	O	TUNER clock signal output.
29	IIC_CLK	O	IIC SCL output.
30	IIC_DATA	O	IIC SDA output.
31	TXDI	—	Not used.
32	SQ-DATA	I	Subcode Q data input. (CD data)
33	SQ-CLK	I	Subcode Q data input. (CD clock)
34	RST1	I	Not used.
35	CD-DATA	O	CD data input.
36	N.C	I	Not used.
37	CD-CLK	O	CD clock input.
38	N.C	I	Not used.
39	CLOCK-OUT	I	Clock check signal input.
40	SENS	I	BD condition signal input.
41	HOLD	O	MODE signal input.
42	XLT	O	CD latch signal output.
43	XRST	O	CD reset signal output.
44	LOAD-IN	I	Loading motor control signal input.
45	LOAD-OUT	O	Loading motor control signal output.
46	OPEN	I	Tray open detect signal input.
47	CLOSE	I	Tray close detect signal input.
48	UP/DOWN SW	I	Pick-up up/down detect signal input.
49	T-SENS	I	CD table detect signal input.
50	TEST MODE	I	Not used.

Pin No.	Pin Name	I/O	Description
51	N.C	I	Not used.
52	N.C	I	Not used.
53	N.C	I	Not used.
54	N.C	I	Not used.
55	N.C	I	Not used.
56	N.C	I	Not used.
57	A TRIG	O	A deck trigger control signal output.H=ON, L-OFF
58	B TRIG	O	B deck trigger control signal output.H=ON, L-OFF
59	CAPM-H/L	O	Capstan motor High/Low speed control signal output.
60	CAPM-CONT	O	Capstan motor REV/FWD/STOP control signal output.H=REV, L=FWD/STOP
61	N.C	I	Not used.
62	VCC	—	POWER SUPPLY (+5V)
63	N.C	I	Not used.
64	VSS	—	Ground.
65	N.C	I	Not used.
66	N.C	I	Not used.
67	A HALF	I	A deck half detect signal input.
68	A PLAY	I	A deck play detect signal input.
69	B PLAY	I	B deck play detect signal input.
70	AMS-IN	I	AMS signal input. L=ON,H=OFF
71	TC-MUTE	O	Tape deck line mute ON/OFF signal output. H=ON, L=OFF
72	R/PB/PAS	I	REC/PB/PASS select signal input.
73	NR-ON/OFF	O	DOLBY NR ON/OFF signal output. H=ON, L=OFF
74	REC-MUTE	O	REC mute ON/OFF signal output. L=ON, H=OFF
75	BAIS	O	BIAS ON/OFF signal output.H=ON, L=OFF
76	EQ-H/N	O	EQ High/Normal select signal output. H=High, L=Normal
77	PB-A/B	O	Playback deckA/B select signal output. H=deckB, L=deckA
78	ALC	O	ALC ON/OFF signal output. L=ON, H=OFF
79	TC-RELAY	O	Tape deck relay ON/OFF signal output. H=ON, L=OFF
80	N.C	I	Not used.
81	STBY-RELAY	O	STANDBY relay control signal output.
82	PROTECT	I	Speaker protect signal input. L=ON, H=OFF
83	DBFB-ON/OFF	I	Not used.
84	LINE-MUTE	O	Line mute signal output. L=ON, H=OFF
85	CD-POWER	O	CD-POWER ON/OFF signal output. H=ON, L=OFF
86	F-SHIFT	O	Not used.
87	RELAY-H	O	Speaker terminal relay control signal output. H=ON, L=OFF
88	POWER	O	POWER ON/OFF signal output. H=ON, L=OFF
89	N.C	O	Not used.
90	A SHUT	O	A deck reel pulse detect signal output.
91	B SHUT	O	B deck reel pulse detect signal output.
92	SOFT-TEST	O	Not used.
93	B HALF	O	B deck half detect signal input.
94	KEY/CD ADJ	O	KEY (for jig) / CD adjust.
95	MODEL-IN	I	MODEL input.
96	AVSS	—	Analog ground.
97	SPEC-IN	I	Version select signal input.
98	VREF	—	Analog Reference Voltage
99	AVCC	—	Analog Power Supply
100	STK-MUTE	O	Power amplifier mute ON/OFF signal output. H=ON, L=OFF

40

• PANEL BOARD IC601 TMP88CP77F-1A22 (DISPLAY CONTROL)

Pin No.	Pin Name	I/O	Description
1	VOLUME A	I	VOLUME A signal input.
2	VOLUME B	I	VOLUME B signal input.
3	HEADPHONE	I	Head phone detect signal input. H=ON, L=OFF
4	N.C	I	Not used.
5	TUNER	O	TUNER LED driver output.(high active)
6	CD	O	CD LED driver output.(high active)
7	TAPE A/B	O	TAPE A/B LED driver output.(high active)
8	MD/VIDEO	O	MD/VIDEO LED driver output.(high active)
9-10	N.C	O	Not used.
11	GROOVE	O	GROOVE LED driver output.(high active)
12-14	N.C	O	Not used.
15	REC/PAUSE	O	REC/PAUSE LED driver output.(high active)
16	SURROUND	O	SURROUND LED driver output.(high active)
17-19	KEY0-2	I	KEY input. (AD)
20	Super Low Freq (BPF 0)	I	BPF input. (AD)
21-25	BPF1-5	I	BPF input. (AD)
26	ALL BAND	I	BPF input. (AD)
27	TIMER	O	TIMER SEL LED driver output.
28	STANDBY	O	STANDBY LED output.
29	VSS	—	Ground.
30	VASS	—	Ground.
31	AVREF	—	Analog reference voltage.
32	VDD	—	Power supply (+5V)
33-49	G17-1	O	FL gride signal output.
50	P1	O	FL segment signal output.
51	VDD VFT	—	Power supply (+5V)
52-85	P2-35	O	FL segment signal output.
86	N.C	I	Not used.
87	VKK	—	–]30V driving power for FL.
88	VDD	—	Power supply (+5V)
89	Xin	I	12.5MHz (Xin)
90	VSS	—	Ground.
91	Xout	O	12.5MHz (Xout)
92	RESET	I	RESET (low active)
93-94	N.C	I	Not used.
95	TEST	I	Connected to ground.
96	WAKE UP	O	WAKE UP signal output for master controller. (PULL UP)
97	I2C data	O	IIC SDA
98	I2C clk	O	IIC SCL
99	N.C	I	Not used.
100	SIRCS	I	Remote commander input. (input capture)

7-20. IC BLOCK DIAGRAMS

IC101 CXD2587Q (BD BOARD)

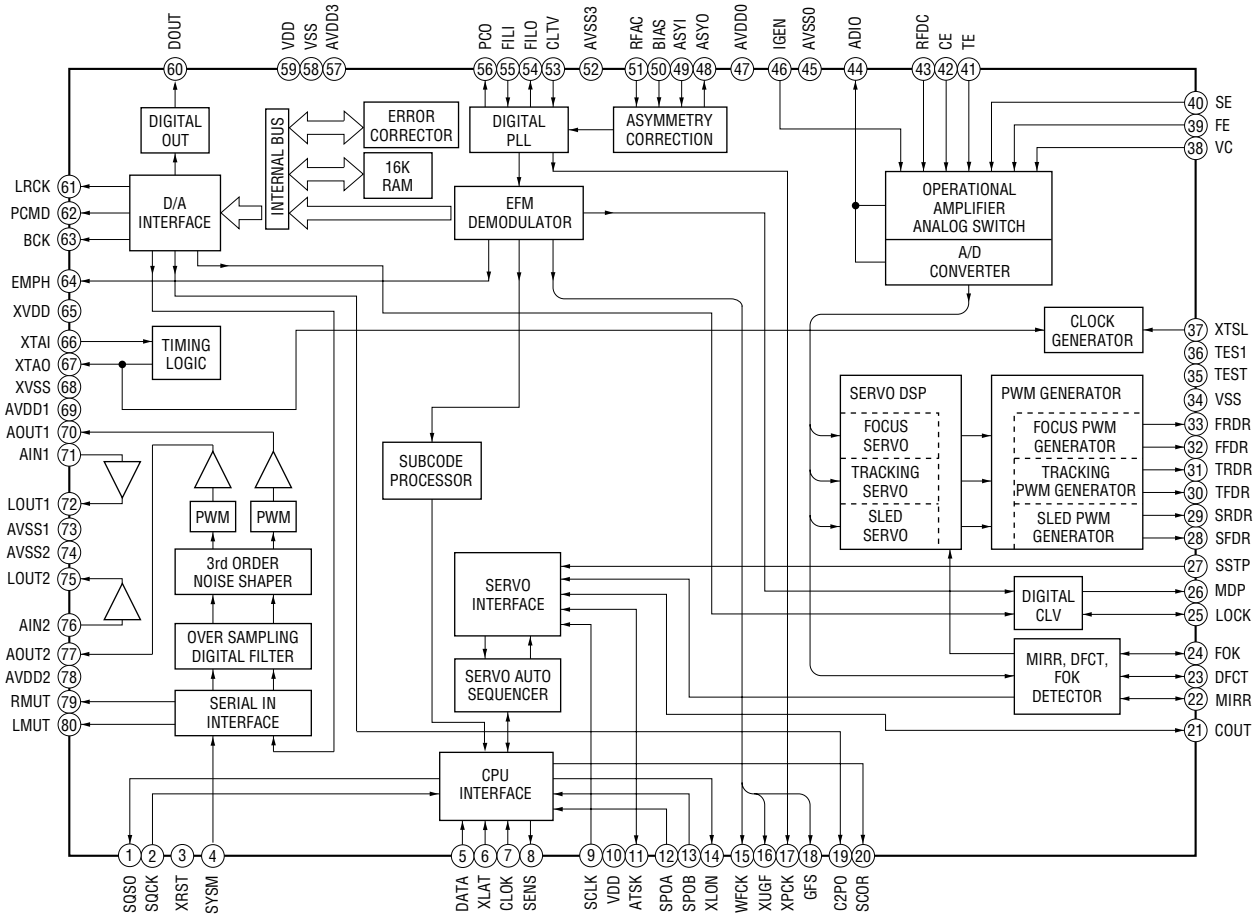

IC102 BA5974FP (BD BOARD)

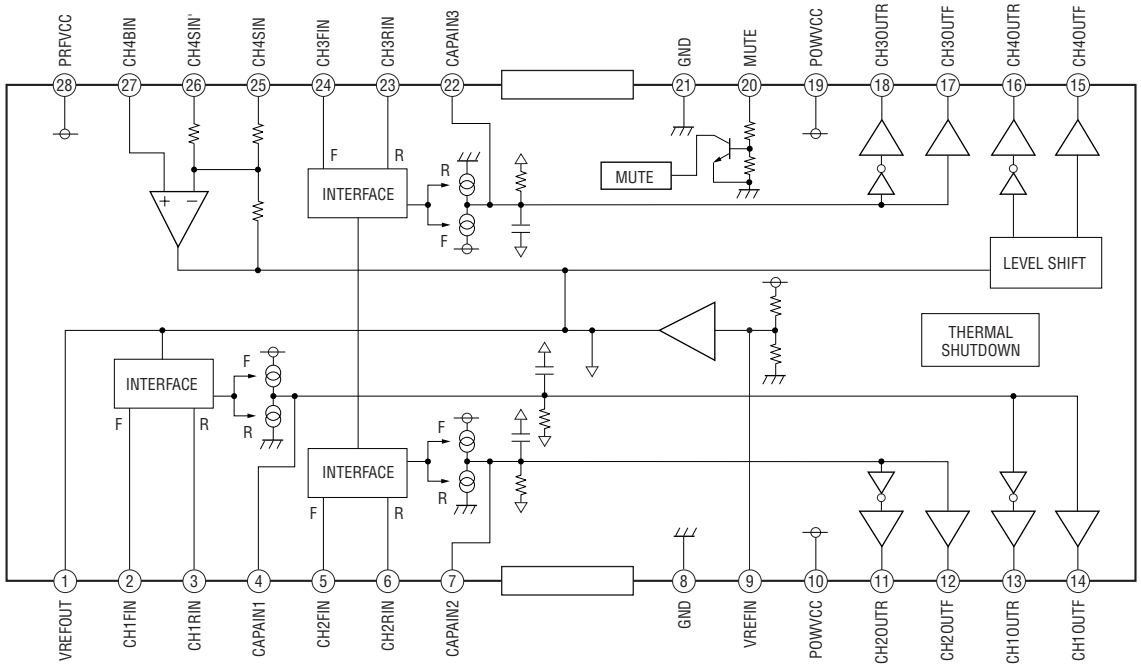

IC103 CXA2568M (BD BOARD)

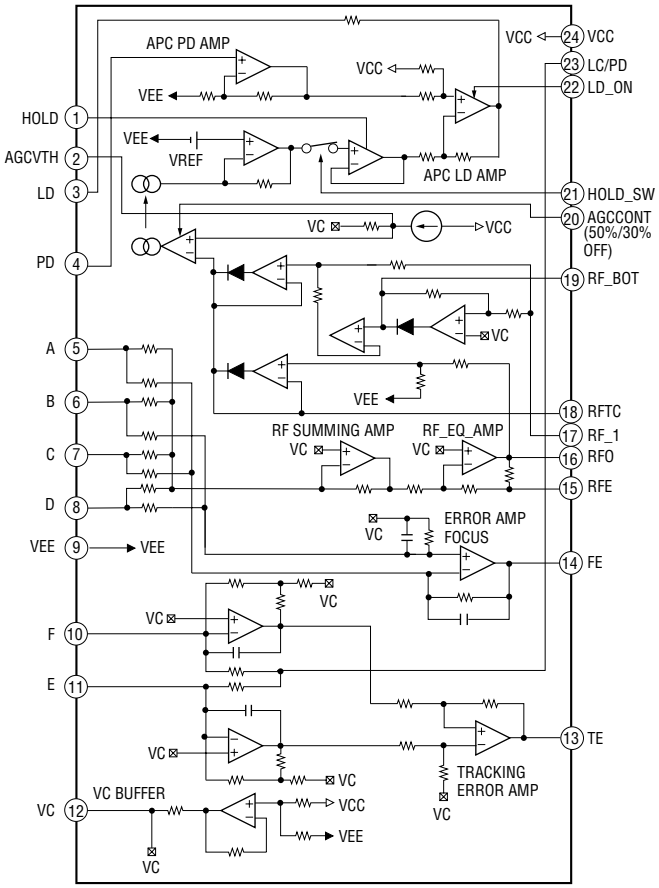

IC602 BA3830F (PANEL BOARD)

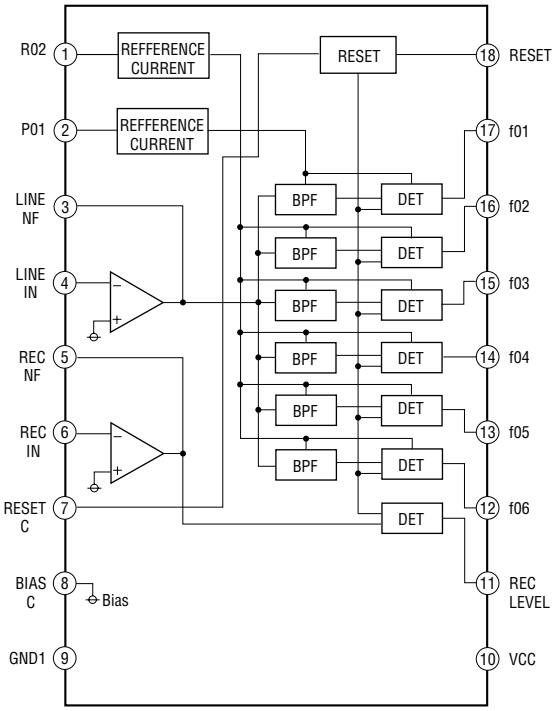

IC101 M62498FP (MAIN BOARD)

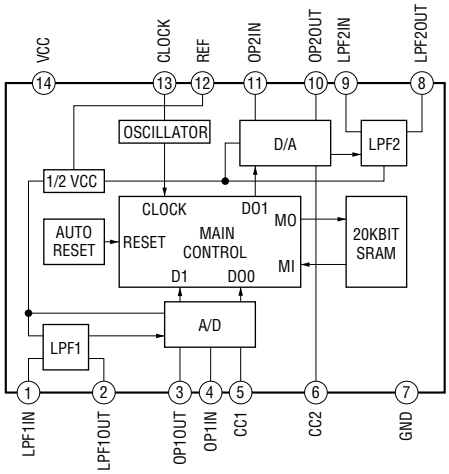

IC682 BU1924 (MAIN BOARD)

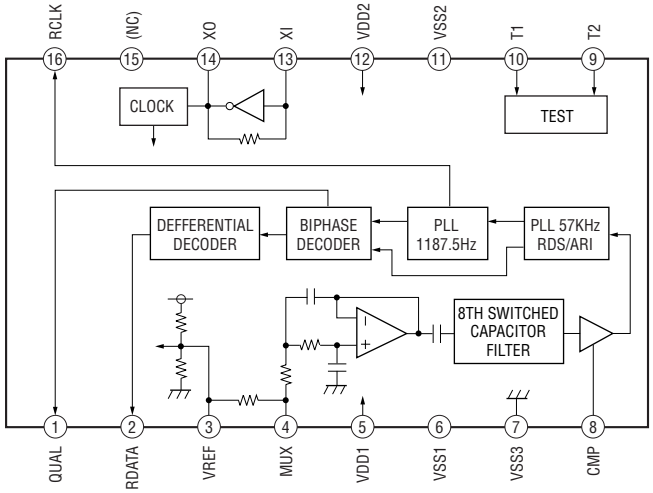

IC701 BA6956AN (DRIVER BOARD)

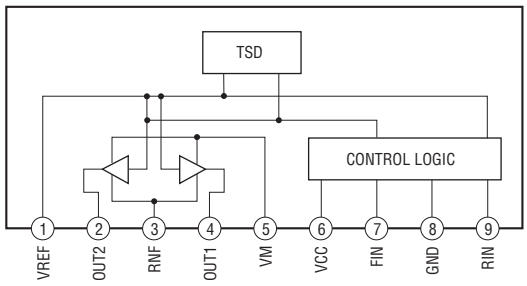

IC601 BA1450 (MAIN BOARD)

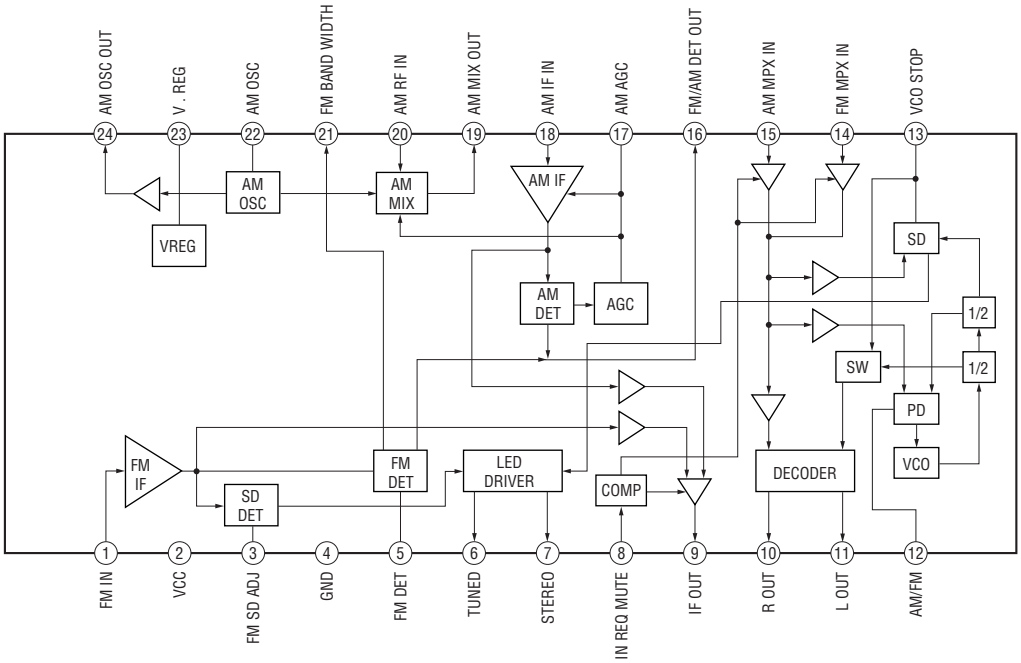

IC302 μPC1330H (MAIN BOARD)

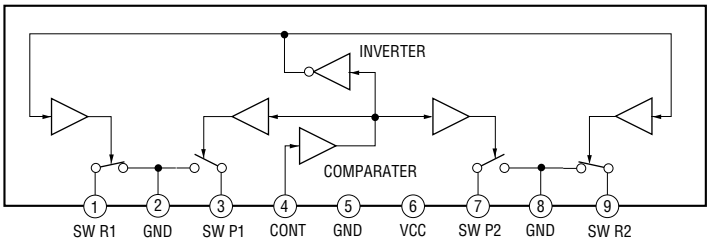

IC681 M5218AFP (MAIN BOARD)

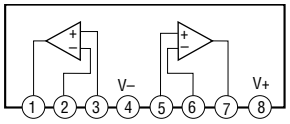

IC651 LC72130 (MAIN BOARD)

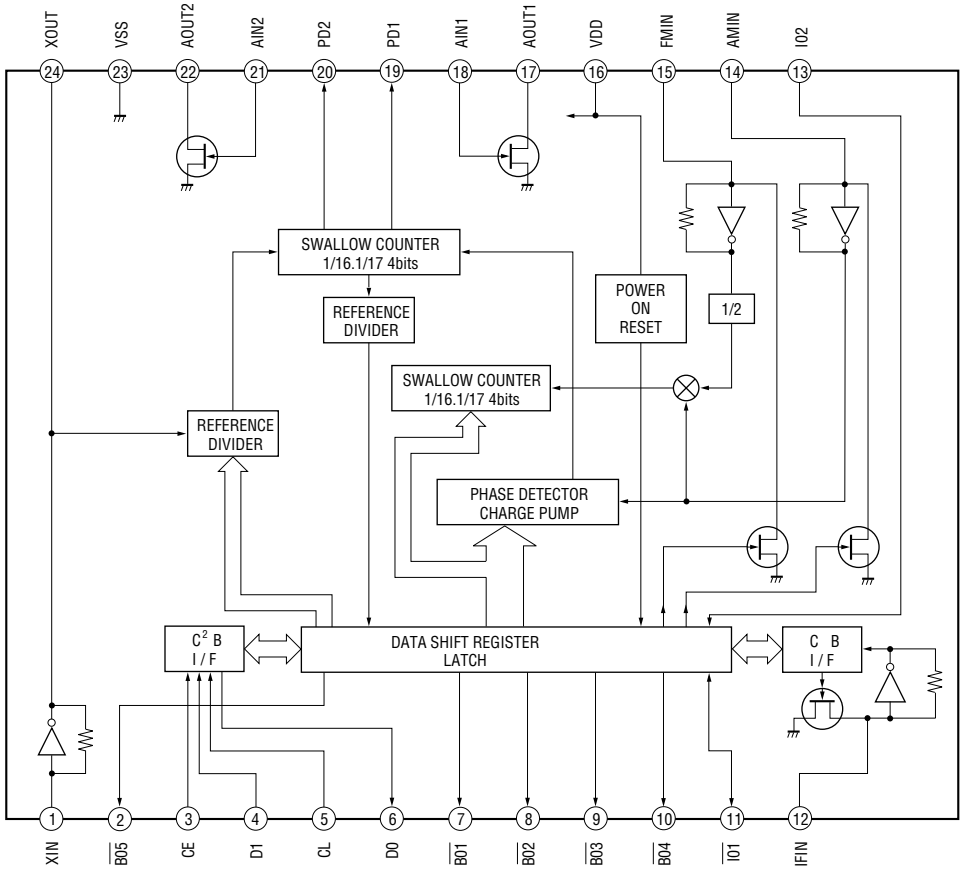

SECTION 8
EXPLODED VIEWS

NOTE:

- -XX, -X mean standardized parts, so they may have some differences from the original one.
- Items marked "*" are not stocked since they are seldom required for routine service. Some delay should be anticipated when ordering these items.
- The mechanical parts with no reference number in the exploded views are not supplied.
- Hardware (# mark) list and accessories and packing materials are given in the last of this parts list.
- Abbreviation
  - CND : Canadian model
  - AUS : Australian model
  - G : German model
  - AED : North European model
  - EA : Saudi Arabia model
  - MY : Malaysia model
  - SP : Singapore model
  - TH : Thai model
  - TW : Taiwan model
  - KR : Korea model
  - MX : Mexican model
  - AR : Argentina model

The components identified by mark ⚠ or dotted line with mark ⚠ are critical for safety. Replace only with part number specified.

Les composants identifiés par une marque ⚠ sont critiques pour la sécurité. Ne les remplacer que par une pièce portant le numéro spécifié.

8-1. MAIN SECTION

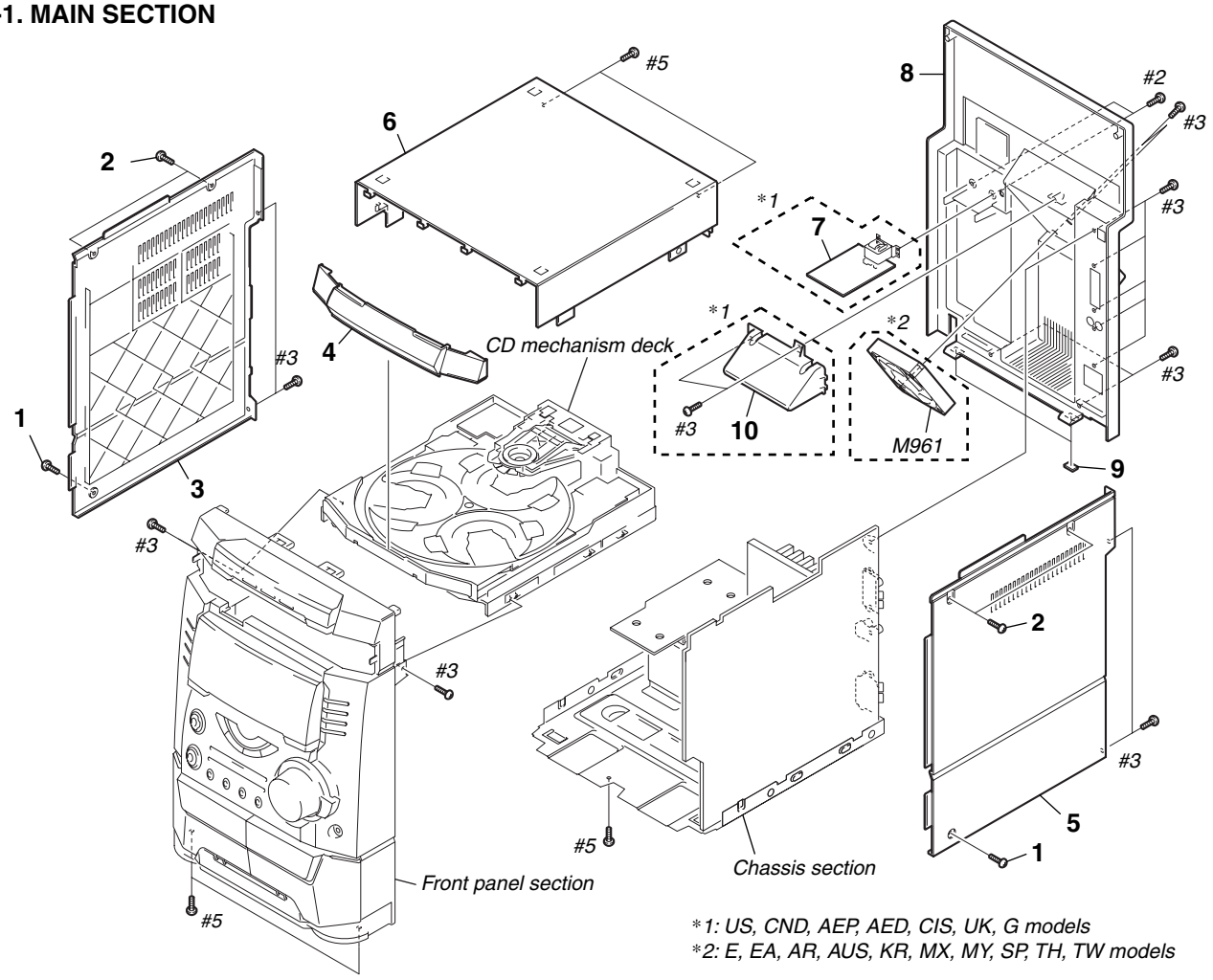

*1: US, CND, AEP, AED, CIS, UK, G models
*2: E, EA, AR, AUS, KR, MX, MY, SP, TH, TW models

Ref. No.	Part No.	Description	Remarks
1	3-363-099-01	SCREW(CASE 3 TP2)	
2	3-363-099-41	SCREW(CASE 3 TP2)	
3	4-225-038-01	SIDE PANEL L	(AED,AEP,CIS,CND,UK,G,US,KR,TH)
3	4-225-038-21	SIDE PANEL L (AR,AUS,E,EA,MX,MY,SP,TH,TW)	
4	4-225-017-01	LOADING PANEL (AED,AEP,CIS,CND,UK,G,US)	
4	4-225-017-11	LOADING PANEL	(AR,AUS,E,KR,MX,MY,SP,TH,TW)
4	4-225-017-21	LOADING PANEL (EA)	
5	4-225-039-01	SIDE PANEL R	(AED,AEP,CIS,CND,UK,G,US,KR,TH)
5	4-225-039-21	SIDE PANEL R (AR,AUS,E,EA,MX,MY,SP,TH,TW)	
6	4-224-550-01	UPPER CASE (TOP) (EXCEPT US,CND)	

Ref. No.	Part No.	Description	Remarks
6	4-224-550-21	UPPER CASE (TOP) (US,CND)	
7	A-4428-082-A	SUB-TRANS BOARD,COMPLETE	(AED,AEP,CIS,UK,G)
7	A-4428-088-A	SUB-TRANS BOARD,COMPLETE (US)	
7	A-4428-959-A	SUB-TRANS BOARD,COMPLETE (CND)	
8	4-225-040-01	BACK PANEL	(AED,AEP,CIS,UK,G,AUS,KR,MX,TH)
8	4-225-040-11	BACK PANEL (AR,E,EA,MY,SP,TW)	
8	4-225-040-21	BACK PANEL (US,CND)	
9	4-225-252-01	CUSHION (FOOT)	
10	4-227-467-01	DUCT (B3) (AED,AEP,CIS,CND,UK,US,G)	
M961	1-763-072-11	FAN, D.C. (AR,AUS,E,EA,KR,MX,MY,SP,TH,TW)	

8-2. PANEL SECTION

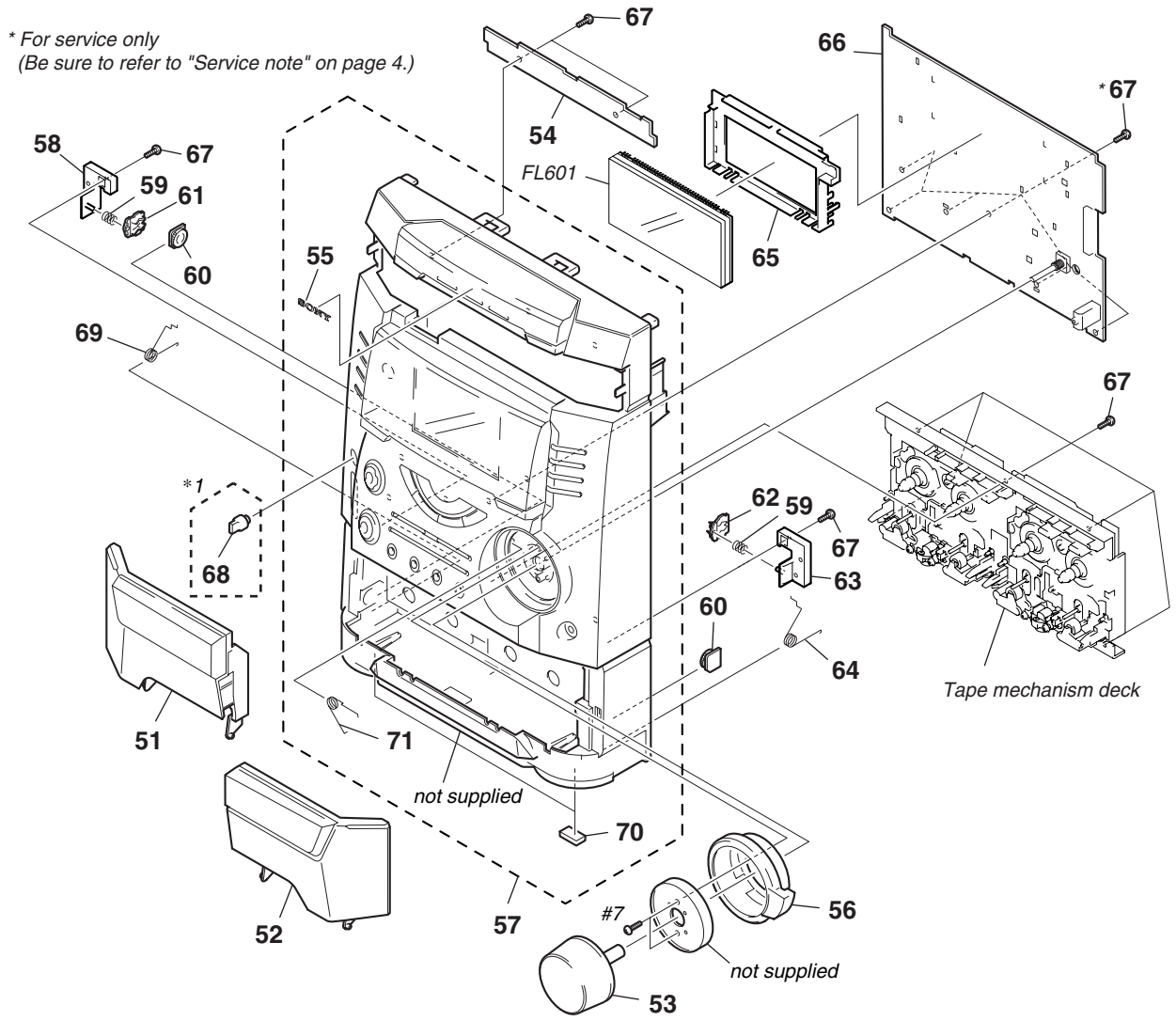

*1: E, EA, AR, AUS, KR, MX, MY, SP, TH, TW models

Ref. No.	Part No.	Description	Remarks
51	X-4952-418-1	TC HOLDER (L) ASSY	
52	X-4952-419-1	TC HOLDER (R) ASSY	
53	4-225-032-01	VOL KNOB	
54	A-4428-077-A	CD SWITCH BOARD,COMPLETE	
55	4-962-708-71	EMBLEM (4-A), SONY	
56	4-225-033-01	FR KNOB	
57	X-4952-415-1	FRONT PANEL ASSY (AED,AEP,CIS,UK,G)	
57	X-4952-416-1	FRONT PANEL ASSY (US,CND)	
57	X-4952-417-1	FRONT PANEL ASSY (AR,AUS,E,KR,MX,MY,SP,TH,TW)	
57	X-4952-594-1	FRONT PANEL ASSY (EA)	
58	4-224-562-01	BRACKET (HEART CAM L)	
59	4-224-803-01	SPRING (PUSH),COMPRESSION COIL	
60	4-224-104-01	DAMPER (TH)	
60	4-224-104-11	DAMPER (EXCEPT TH)	
61	4-224-560-01	CAM(L), HEART	

Ref. No.	Part No.	Description	Remarks
62	4-224-559-01	CAM(R), HEART	
63	4-224-561-01	BRACKET (HEART CAM R)	
64	4-225-053-01	SPRING R	
65	4-224-584-01	HOLDER (FL)	
66	A-4428-075-A	PANEL BOARD,COMPLETE (AED,AEP,CIS,CND,UK,G,US)	
66	A-4428-092-A	PANEL BOARD,COMPLETE (AR,AUS,E,KR,MX,MY,SP,TW)	
66	A-4428-286-A	PANEL BOARD,COMPLETE (EA)	
66	A-4428-907-A	PANEL BOARD,COMPLETE (TH)	
67	4-951-620-01	SCREW (2.6X8), +BVTP	
68	4-224-578-01	KNOB(MIC)(AR,AUS,E,EA,KR,MX,MY,SP,TH,TW)	
69	4-225-052-01	SPRING L	
70	4-225-252-01	CUSHION (FOOT)	
71	4-225-054-01	SPRING FR	
FL601	1-517-928-11	INDICATOR TUBE, FLUORESCENT	

8-3. MAIN BOARD SECTION

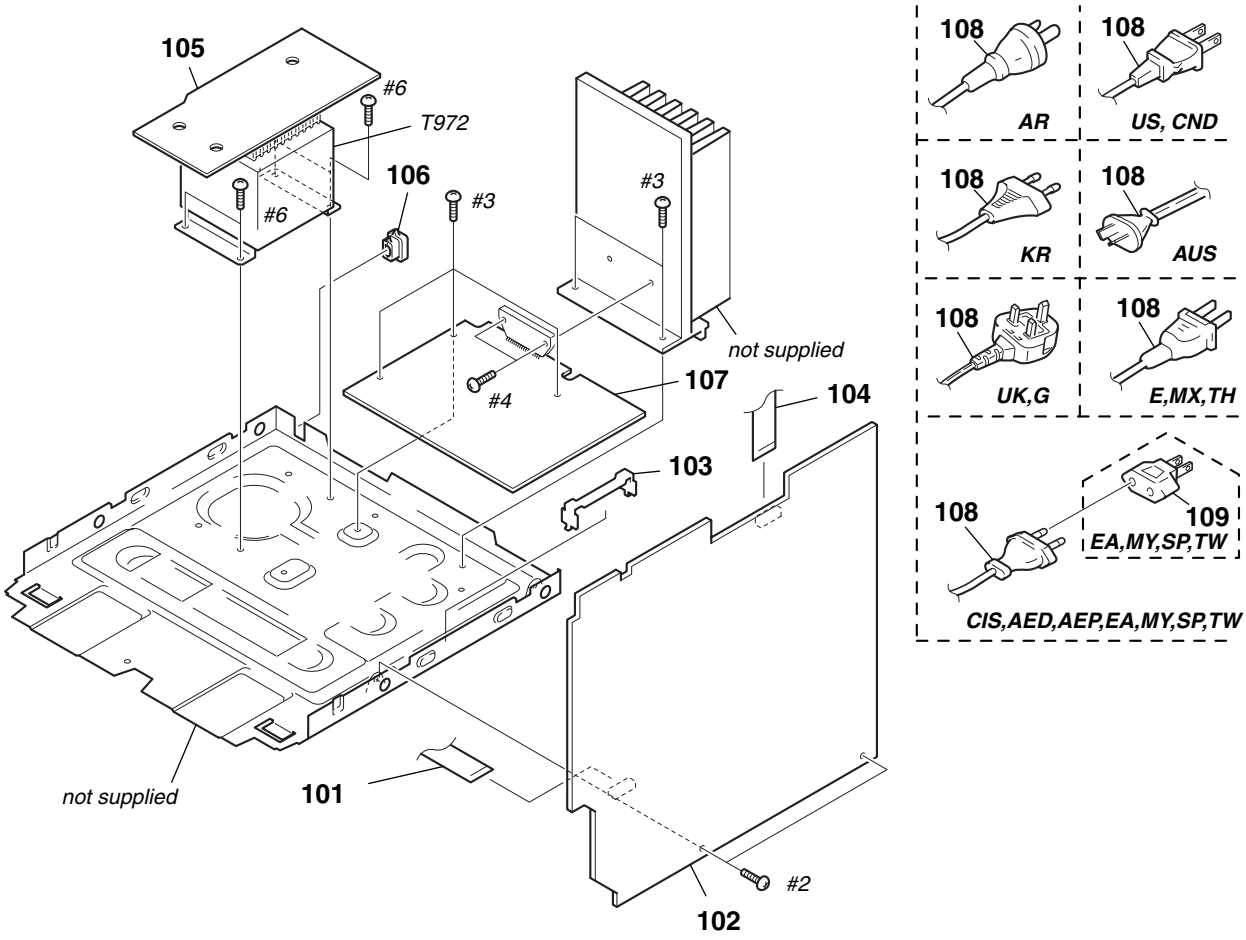

Ref. No.	Part No.	Description	Remarks
101	1-773-045-11	WIRE (FLAT TYPE) (17 CORE)	
102	A-4428-070-A	MAIN BOARD,COMPLETE (AED,AEP,CIS,UK,G)	
102	A-4428-084-A	MAIN BOARD,COMPLETE (CND,US)	
102	A-4428-090-A	MAIN BOARD,COMPLETE (MY,SP,TW)	
102	A-4428-288-A	MAIN BOARD,COMPLETE (EA)	
102	A-4428-290-A	MAIN BOARD,COMPLETE (AUS)	
102	A-4428-292-A	MAIN BOARD,COMPLETE (E)	
102	A-4428-735-A	MAIN BOARD,COMPLETE (AR,MX)	
102	A-4428-910-A	MAIN BOARD,COMPLETE (TH)	
102	A-4428-958-A	MAIN BOARD,COMPLETE (KR)	
* 103	4-988-533-01	HOLDER, PWB	
104	1-773-122-11	WIRE (FLAT TYPE) (19 CORE)	
105	1-676-192-11	TRANS BOARD	
106	3-703-571-11	BUSHING (S) (4516), CORD (E,MX,TH)	
* 106	3-703-244-00	BUSHING (2104), CORD (EXCEPT E,MX,TH)	
107	A-4428-079-A	POWER AMP BOARD,COMPLETE (AED,AEP,CIS,UK,G,US)	
107	A-4428-094-A	POWER AMP BOARD,COMPLETE (AR,AUS,E,EA,KR,MX,MY,SP,TW)	
107	A-4428-336-A	POWER AMP BOARD,COMPLETE (CND)	
107	A-4428-901-A	POWER AMP BOARD,COMPLETE (TH)	
⚠108	1-696-847-11	CORD, POWER (AUS)	
⚠108	1-769-079-21	CORD, POWER (KR)	
⚠108	1-777-071-51	CORD, POWER (AED,AEP,CIS,EA,MY,SP,TW)	
⚠108	1-783-820-11	CORD, POWER (CND,US)	
⚠108	1-783-941-11	CORD, POWER (AR)	
⚠108	1-790-226-11	CORD, POWER (UK,G)	
⚠108	1-791-901-11	CORD, POWER (E,MX,TH)	
109	1-569-008-31	ADAPTOR, CONVERSION (EA,MY,SP,TW)	
⚠T972	1-435-261-11	TRANSFORMER, POWER (AED,AEP,CIS,UK,G)	
⚠T972	1-435-262-11	TRANSFORMER, POWER (AR,AUS,E,EA,KR,MX,MY,SP,TH,TW)	
⚠T972	1-435-263-11	TRANSFORMER, POWER (CND)	
⚠T972	1-435-264-11	TRANSFORMER, POWER (US)	

The components identified by mark ⚠ or dotted line with mark ⚠ are critical for safety. Replace only with part number specified.	Les composants identifiés par une marque ⚠ sont critiques pour la sécurité. Ne les remplacer que par une pièce portant le numéro spécifié.

8-4. TAPE MECHANISM DECK SECTION

Note: *Two different types of tape mechanism are used depending on models. They maintain compatibility as an entire mechanism even though there are some different parts are used.*

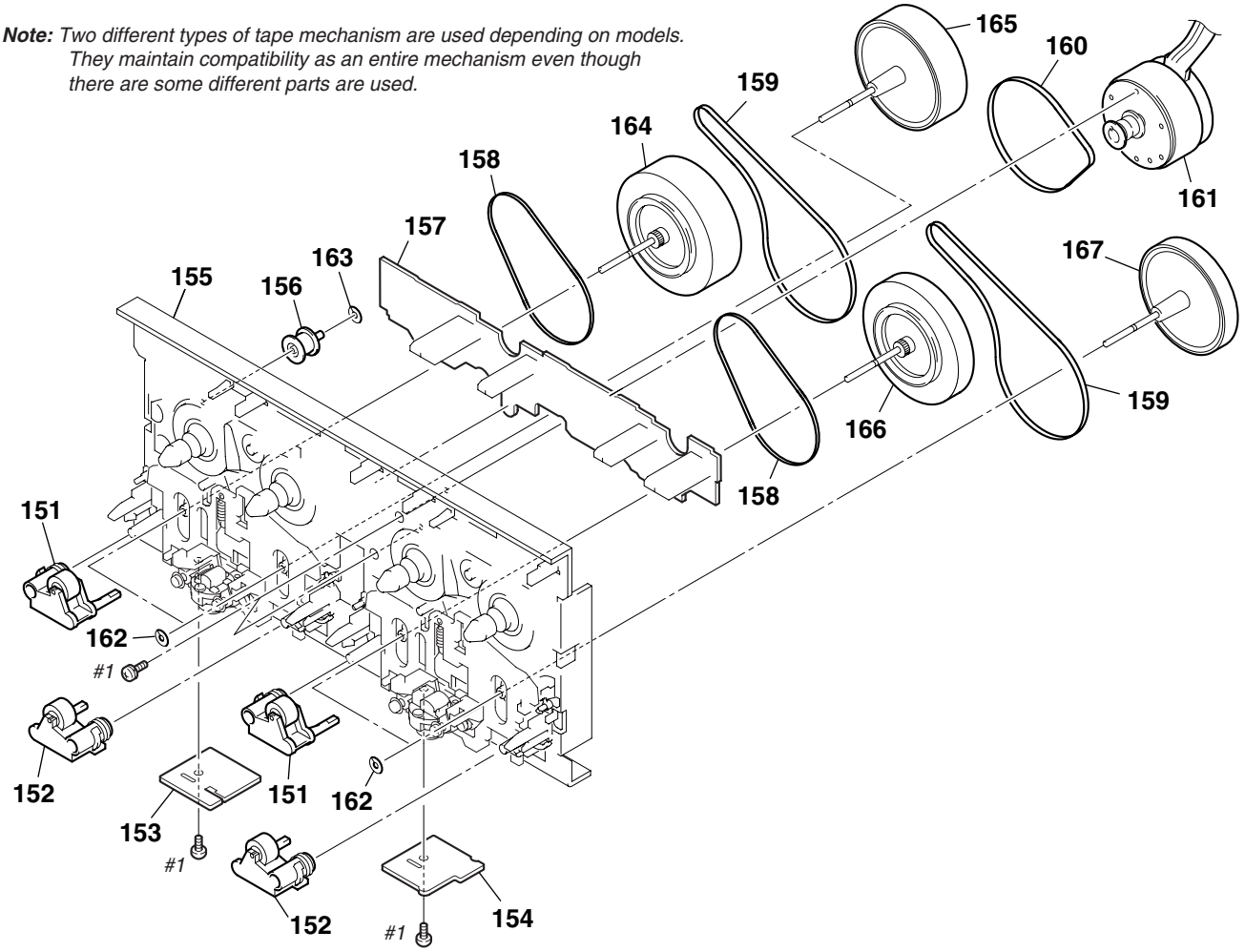

Ref. No.	Part No.	Description	Remarks
151	X-3374-156-4	PINCH LEVER (REV) ASSY	
152	X-3374-155-4	PINCH LEVER (FWD) ASSY	
153	1-676-220-11	HEAD (A) BOARD	
154	1-676-221-11	HEAD (B) BOARD	
155	A-2004-737-A	MAIN CHASIS ASSY	
156	3-040-580-11	PULLEY (TENSION)	
157	A-2007-838-A	LEAF SW BOARD, COMPLETE	
158	3-041-947-01	BELT (FR)	
159	3-041-946-01	BELT (CAPSTAN B)	

Ref. No.	Part No.	Description	Remarks
160	4-227-239-01	BELT (CAPSTAN C)	
161	X-3378-241-1	MOTOR ASSY	
162	3-019-208-01	WASHER, STOPPER	
163	3-016-533-01	WASHER (FR), STOPPER	
164	X-3378-041-1	FLYWHEEL (A-REV) ASSY	
165	X-3378-040-1	FLYWHEEL (A-FWD) ASSY	
166	X-3378-043-1	FLYWHEEL (B-REV) ASSY	
167	X-3378-042-1	FLYWHEEL (B-FWD) ASSY	

8-5. CD MECHANISM DECK SECTION

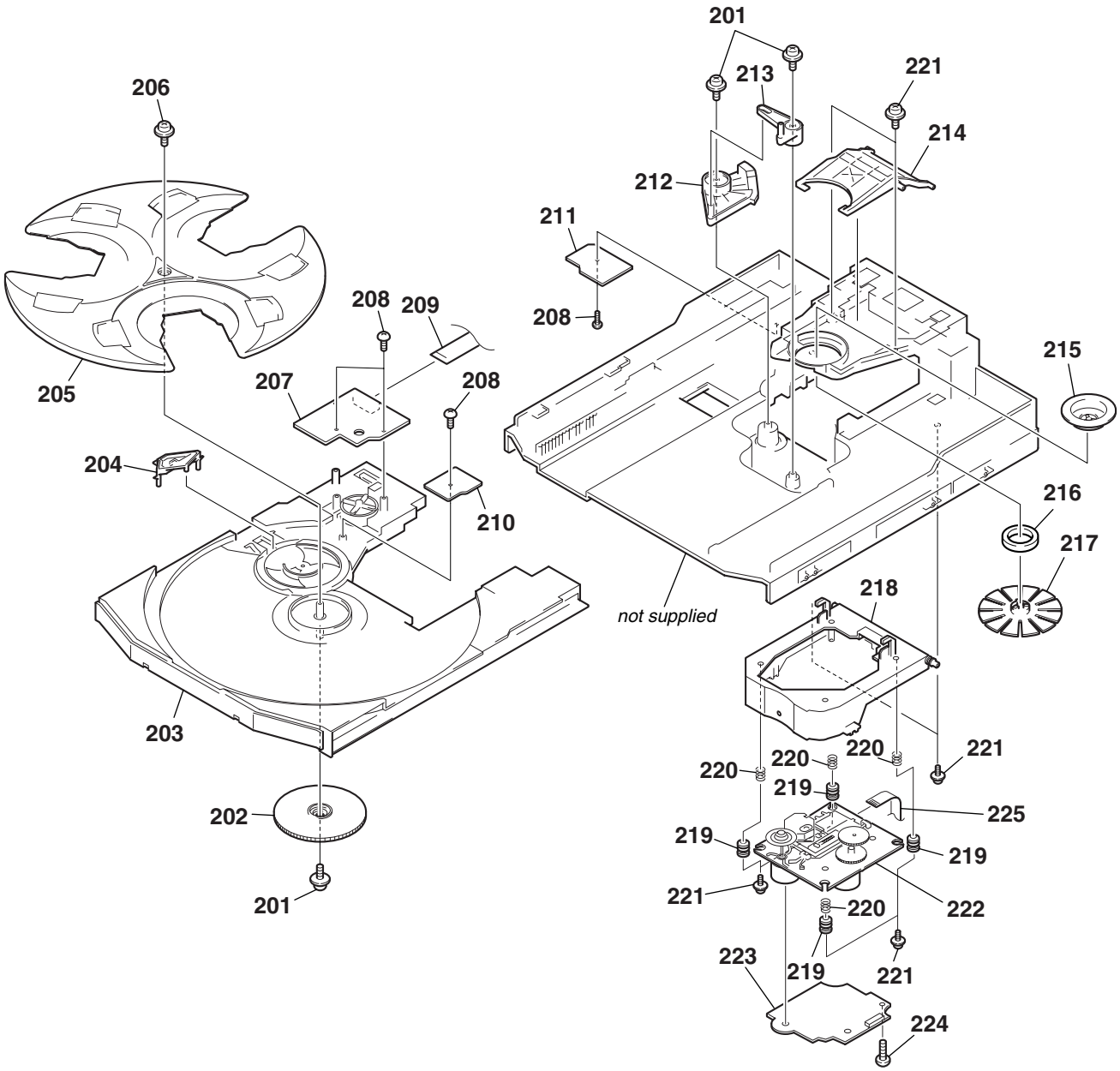

Ref. No.	Part No.	Description	Remarks
201	4-933-134-11	SCREW (+PTPWH M2.6X8)	
202	4-221-679-01	CAM(RELAY)	
203	4-221-675-01	TABLE	
204	4-221-686-01	LEVER (CHANGE)	
205	4-221-676-01	TRAY	
206	4-933-134-51	SCREW (+PTPWH 2.6X8)	
207	1-675-910-11	MOTOR BOARD	
208	4-951-620-01	SCREW (2.6X8), +BVTP	
209	1-791-983-12	WIRE (FLAT TYPE) (8 CORE)	
210	1-675-911-11	ADDRESS SENSOR BOARD	
211	1-675-912-11	DRIVER BOARD	
212	X-4952-608-1	CAM(U/D) ASSY	
213	4-221-681-01	LEVER (EX)	

Ref. No.	Part No.	Description	Remarks
214	4-221-682-01	LEVER (LIFTER)	
215	4-221-688-01	PULLEY (B), CHUCKING	
216	1-471-035-11	MAGNET ASSY	
217	X-4952-019-1	PULLEY (A) ASSY, CHUCKING	
218	X-4951-889-1	HOLDER (BU) ASSY	
219	4-227-549-01	INSULATOR	
220	4-227-045-11	SPRING (INSULATOR), COIL	
221	4-985-672-01	SCREW (+PTPWH M2.6), FLOATING	
⚠222	8-820-116-01	OPTICAL PICK-UP BLOCK (KSM-213DAP)	
223	A-4724-934-A	BD BOARD, COMPLETE	
224	4-951-620-01	SCREW (2.6X8), +BVTP	
225	1-792-024-11	WIRE (FLAT TYPE)(16 CORE)	

The components identified by mark ⚠ or dotted line with mark ⚠ are critical for safety. Replace only with part number specified.	Les composants identifiés par une marque ⚠ sont critiques pour la sécurité. Ne les remplacer que par une pièce portant le numéro spécifié.

SECTION 9
ADDRESS SENSOR BD ELECTRICAL PARTS LIST

NOTE:

- Due to standardization, replacements in the parts list may be different from the parts specified in the diagrams or the components used on the set.
- -XX, -X mean standardized parts, so they may have some difference from the original one.
- Items marked "*" are not stocked since they are seldom required for routine service. Some delay should be anticipated when ordering these items.
- CAPACITORS:
  uF: µF
- RESISTORS
  All resistors are in ohms.
  METAL: metal-film resistor
  METAL OXIDE: Metal Oxide-film resistor
  F: nonflammable
- COILS
  uH: µH
- SEMICONDUCTORS
  In each case, u: µ, for example:
  uA...: µA... , uPA... , µPA... , uPB... , µPB... , uPC... , µPC... , uPD..., µPD...
- Abbreviation
  CND : Canadian model
  AUS : Australian model
  G : German model
  AED : North European model
  EA : Saudi Arabia model
  MY : Malaysia model
  SP : Singapore model
  TH : Thai model
  TW : Taiwan model
  KR : Korea model
  MX : Mexican model
  AR : Argentina model

When indicating parts by reference number, please include the board name.

The components identified by mark ⚠ or dotted line with mark ⚠ are critical for safety. Replace only with part number specified.

Les composants identifiés par une marque ⚠ sont critiques pour la sécurité.
Ne les remplacer que par une pièce portant le numéro spécifié.

Ref. No.	Part No.	Description			Remarks
	1-675-911-11	ADDRESS SENSOR BOARD			
		**********			
		< IC >			
IC711	8-749-016-76	IC RPI-321			
		< RESISTOR >			
R711	1-247-876-11	CARBON	75K	5%	1/4W
R712	1-249-409-11	CARBON	220	5%	1/4W F
R713	1-249-429-11	CARBON	10K	5%	1/4W
		< SWITCH >			
S711	1-771-821-11	SWITCH, PUSH (1 KEY)(UP DOWN)			
**********					
	A-4724-934-A	BD BOARD, COMPLETE			
		**********			
		< CAPACITOR >			
C101	1-163-005-11	CERAMIC CHIP	470PF	10%	50V
C102	1-164-004-11	CERAMIC CHIP	0.1uF	10%	25V
C103	1-163-005-11	CERAMIC CHIP	470PF	10%	50V
C104	1-163-009-11	CERAMIC CHIP	0.001uF	10%	50V
C108	1-164-004-11	CERAMIC CHIP	0.1uF	10%	25V
C109	1-163-011-11	CERAMIC CHIP	0.0015uF	10%	50V
C110	1-164-182-11	CERAMIC CHIP	0.0033uF	10%	50V
C111	1-163-251-11	CERAMIC CHIP	100PF	5.00%	50V
C112	1-107-682-11	CERAMIC CHIP	1uF	10.00%	16V
C114	1-163-038-91	CERAMIC CHIP	0.1uF		25V
C115	1-104-665-11	ELECT	100uF	20.00%	10V
C116	1-104-665-11	ELECT	100uF	20.00%	10V
C117	1-104-665-11	ELECT	100uF	20.00%	10V
C118	1-163-009-11	CERAMIC CHIP	0.001uF	10%	50V
C119	1-163-235-11	CERAMIC CHIP	22PF	5.00%	50V
C121	1-163-038-91	CERAMIC CHIP	0.1uF		25V
C122	1-104-665-11	ELECT	100uF	20.00%	10V
C123	1-163-021-91	CERAMIC CHIP	0.01uF	10.00%	50V
C124	1-107-823-11	CERAMIC CHIP	0.47uF	10.00%	16V
C125	1-163-038-91	CERAMIC CHIP	0.1uF		25V
C126	1-163-038-91	CERAMIC CHIP	0.1uF		25V
C127	1-104-665-11	ELECT	100uF	20.00%	10V
C129	1-163-031-11	CERAMIC CHIP	0.01uF		50V
C130	1-164-346-11	CERAMIC CHIP	1uF		16V
C131	1-126-964-11	ELECT	10uF	20.00%	50V
C133	1-164-346-11	CERAMIC CHIP	1uF		16V
C140	1-164-346-11	CERAMIC CHIP	1uF		16V
C141	1-164-346-11	CERAMIC CHIP	1uF		16V
C143	1-163-038-91	CERAMIC CHIP	0.1uF		25V
C145	1-163-038-91	CERAMIC CHIP	0.1uF		25V
C153	1-163-038-91	CERAMIC CHIP	0.1uF		25V
C159	1-163-019-00	CERAMIC CHIP	0.0068uF	10%	50V
C162	1-104-665-11	ELECT	100uF	20.00%	10V
C163	1-104-665-11	ELECT	100uF	20.00%	10V
C165	1-163-038-91	CERAMIC CHIP	0.1uF		25V
C167	1-163-237-11	CERAMIC CHIP	27PF	5.00%	50V
C168	1-163-235-11	CERAMIC CHIP	22PF	5.00%	50V
C171	1-163-009-11	CERAMIC CHIP	0.001uF	10%	50V
C172	1-163-123-00	CERAMIC CHIP	180PF	5%	50V
C181	1-163-009-11	CERAMIC CHIP	0.001uF	10%	50V
C182	1-163-123-00	CERAMIC CHIP	180PF	5%	50V
		< CONNECTOR >			
CN101	1-784-741-11	CONNECTOR, FFC 19P			
CN102	1-793-907-11	CONNECTOR, FFC/FPC 16P			
		< FERRITE BEAD >			
FB101	1-500-445-21	FERRITE	0UH		
FB103	1-500-445-21	FERRITE	0UH		
		< IC >			
IC101	8-752-386-85	IC CXD2587Q			
IC102	8-759-549-28	IC BA5974FP-E2			
IC103	8-752-085-51	IC CXA2568M-T6			
		< TRANSISTOR >			
Q101	8-729-049-31	TRANSISTOR	2SB710-RTX		

Ref. No.	Part No.	Description			Remarks
		< RESISTOR >			
R101	1-216-077-91	RES-CHIP	15K	5% 1/10W	
R102	1-216-097-91	RES-CHIP	100K	5% 1/10W	
R103	1-216-077-91	RES-CHIP	15K	5% 1/10W	
R104	1-216-085-00	METAL CHIP	33K	5% 1/10W	
R105	1-216-073-00	METAL CHIP	10K	5% 1/10W	
R106	1-216-049-91	RES-CHIP	1K	5% 1/10W	
R107	1-216-073-00	METAL CHIP	10K	5% 1/10W	
R108	1-216-061-00	METAL CHIP	3.3K	5% 1/10W	
R109	1-216-121-91	RES-CHIP	1M	5% 1/10W	
R110	1-216-025-91	RES-CHIP	100	5% 1/10W	
R111	1-216-121-91	RES-CHIP	1M	5% 1/10W	
R113	1-216-121-91	RES-CHIP	1M	5% 1/10W	
R114	1-216-073-00	METAL CHIP	10K	5% 1/10W	
R116	1-216-001-00	METAL CHIP	10	5% 1/10W	
R117	1-216-049-91	RES-CHIP	1K	5% 1/10W	
R118	1-216-025-91	RES-CHIP	100	5% 1/10W	
R119	1-216-059-00	METAL CHIP	2.7K	5% 1/10W	
R123	1-216-073-00	METAL CHIP	10K	5% 1/10W	
R124	1-216-097-91	RES-CHIP	100K	5% 1/10W	
R131	1-216-033-00	METAL CHIP	220	5% 1/10W	
R143	1-216-103-00	METAL CHIP	180K	5% 1/10W	
R144	1-216-103-00	METAL CHIP	180K	5% 1/10W	
R147	1-216-069-00	METAL CHIP	6.8K	5% 1/10W	
R148	1-216-001-00	METAL CHIP	10	5% 1/10W	
R149	1-216-001-00	METAL CHIP	10	5% 1/10W	
R158	1-216-111-00	METAL CHIP	390K	5% 1/10W	
R159	1-216-101-00	METAL CHIP	150K	5% 1/10W	
R162	1-216-101-00	METAL CHIP	150K	5% 1/10W	
R171	1-216-078-00	RES-CHIP	16K	5% 1/10W	
R172	1-216-073-00	METAL CHIP	10K	5% 1/10W	
R173	1-216-077-91	RES-CHIP	15K	5% 1/10W	
R181	1-216-078-00	RES-CHIP	16K	5% 1/10W	
R182	1-216-073-00	METAL CHIP	10K	5% 1/10W	
R183	1-216-077-91	RES-CHIP	15K	5% 1/10W	
		< NETWORK >			
RN101	1-233-576-11	RES, CHIP NETWORK 100			
		< SWITCH >			
S101	1-771-853-11	SWITCH, DETECTION (LIMIT IN)			
		< VIBRATOR >			
X101	1-579-280-11	VIBRATOR, CRYSTAL(16.9344 MHz)			
**********					
	1-675-912-11	DRIVER BOARD			
		**********			
		< CAPACITOR >			
C702	1-126-964-51	ELECT	10uF	20.00% 50V	
		< CONNECTOR >			
CN701	1-785-336-11	PIN, CONNECTOR(LIGHT ANGLE)10P			
CN702	1-785-550-11	CONNECTOR, FFC/FPC 8P			

Ref. No.	Part No.	Description			Remarks
		< DIODE >			
D701	8-719-983-63	DIODE	MTZJ-T-72-3.3B		
		< IC >			
IC701	8-759-598-69	IC BA6956AN			
		< RESISTOR >			
R701	1-249-411-11	CARBON	330	5% 1/4W	
R702	1-249-401-11	CARBON	47	5% 1/4W	F
**********					
	1-676-220-11	HEAD(A) BOARD			
		**********			
		< CONNECTOR >			
* CN1	1-564-719-11	PIN, CONNECTOR (SMALL TYPE) 3P			
**********					
	1-676-221-11	HEAD(B) BOARD			
		**********			
CN2	1-564-722-11	PIN, CONNECTOR (SMALL TYPE) 6P			
**********					
	A-4428-070-A	MAIN BOARD, COMPLETE (AED,AEP,CIS,G,UK)			
		**********			
	A-4428-084-A	MAIN BOARD, COMPLETE (CND,US)			
		**********			
	A-4428-090-A	MAIN BOARD, COMPLETE (MY,SP,TW)			
		**********			
	A-4428-288-A	MAIN BOARD, COMPLETE (EA)			
		**********			
	A-4428-290-A	MAIN BOARD, COMPLETE (AUS)			
		**********			
	A-4428-292-A	MAIN BOARD, COMPLETE (E)			
		**********			
	A-4428-735-A	MAIN BOARD, COMPLETE (AR,MX)			
		**********			
	A-4428-910-A	MAIN BOARD, COMPLETE (TH)			
		**********			
	A-4428-958-A	MAIN BOARD, COMPLETE (KR)			
		**********			
	4-224-796-21	HEATSINK (B)			
	7-685-646-79	SCREW+BVTP	3X8	TYPE2 N-S	
		< CAPACITOR >			
C101	1-163-001-11	CERAMIC CHIP	220PF	10% 50V	
C102	1-126-961-11	ELECT	2.2uF	20.00% 50V	
C103	1-126-964-11	ELECT	10uF	20.00% 50V	
C104	1-126-964-11	ELECT	10uF	20.00% 50V	
C105	1-126-964-11	ELECT	10uF	20.00% 50V	
C106	1-136-165-00	MYLAR	0.1uF	5.00% 50V	
C107	1-136-495-11	MYLAR	0.068uF	5.00% 50V	
C108	1-136-495-11	MYLAR	0.068uF	5.00% 50V	
C109	1-163-019-00	CERAMIC CHIP	0.0068uF	10% 50V	
C110	1-163-019-00	CERAMIC CHIP	0.0068uF	10% 50V	

MAIN

Ref. No.	Part No.	Description			Remarks
C111	1-163-018-00	CERAMIC CHIP	0.0056uF	5% 50V	
C112	1-126-961-11	ELECT	2.2uF	20.00% 50V	
C113	1-126-961-11	ELECT	2.2uF	20.00% 50V	
C115	1-136-169-00	MYLAR	0.22uF	5.00% 50V	
C116	1-136-169-00	MYLAR	0.22uF	5.00% 50V	
C117	1-126-964-11	ELECT	10uF	20.00% 50V	
C118	1-126-961-11	ELECT	2.2uF	20.00% 50V	
C121	1-126-964-11	ELECT	10uF	20.00% 50V	
			(AR,AUS,E,EA,KR,MX,MY,SP,TH,TW)		
C122	1-126-964-11	ELECT	10uF	20.00% 50V	
			(AR,AUS,E,EA,KR,MX,MY,SP,TH,TW)		
C123	1-126-964-11	ELECT	10uF	20.00% 50V	
			(AR,AUS,E,EA,KR,MX,MY,SP,TH,TW)		
C124	1-163-038-91	CERAMIC CHIP	0.1uF	25V	
C125	1-126-964-11	ELECT	10uF	20.00% 50V	
			(AR,AUS,E,EA,KR,MX,MY,SP,TH,TW)		
C131	1-136-164-00	MYLAR	0.082uF	5.00% 50V	
C132	1-126-964-11	ELECT	10uF	20.00% 50V	
C133	1-126-964-11	ELECT	10uF	20.00% 50V	
C134	1-163-033-91	CERAMIC CHIP	0.022uF	50V	
C135	1-126-964-11	ELECT	10uF	20.00% 50V	
C140	1-163-038-91	CERAMIC CHIP	0.1uF	25V	
C141	1-126-964-11	ELECT	10uF	20.00% 50V	
					(EXCEPT TH)
C142	1-163-038-91	CERAMIC CHIP	0.1uF	25V	
C144	1-126-964-11	ELECT	10uF	20.00% 50V	
C146	1-126-964-11	ELECT	10uF	20.00% 50V(TH)	
C151	1-163-001-11	CERAMIC CHIP	220PF	10% 50V	
C152	1-126-961-11	ELECT	2.2uF	20.00% 50V	
C153	1-126-964-11	ELECT	10uF	20.00% 50V	
C154	1-126-964-11	ELECT	10uF	20.00% 50V	
C155	1-126-964-11	ELECT	10uF	20.00% 50V	
C156	1-136-165-00	MYLAR	0.1uF	5.00% 50V	
C157	1-136-495-11	MYLAR	0.068uF	5.00% 50V	
C158	1-136-495-11	MYLAR	0.068uF	5.00% 50V	
C159	1-163-019-00	CERAMIC CHIP	0.0068uF	10% 50V	
C160	1-163-019-00	CERAMIC CHIP	0.0068uF	10% 50V	
C161	1-163-018-00	CERAMIC CHIP	0.0056uF	5% 50V	
C162	1-126-961-11	ELECT	2.2uF	20.00% 50V	
C165	1-136-169-00	MYLAR	0.22uF	5.00% 50V	
C166	1-136-169-00	MYLAR	0.22uF	5.00% 50V	
C167	1-126-964-11	ELECT	10uF	20.00% 50V	
C171	1-126-964-11	ELECT	10uF	20.00% 50V	
			(AR,AUS,E,EA,KR,MX,MY,SP,TH,TW)		
C172	1-126-964-11	ELECT	10uF	20.00% 50V	
			(AR,AUS,E,EA,KR,MX,MY,SP,TH,TW)		
C175	1-126-964-11	ELECT	10uF	20.00% 50V	
			(AR,AUS,E,EA,KR,MX,MY,SP,TH,TW)		
C199	1-163-038-91	CERAMIC CHIP	0.1uF	25V	
C201	1-104-665-11	ELECT	100uF	20.00% 10V	
C202	1-126-935-11	ELECT	470uF	20.00% 6.3V	
C203	1-163-033-91	CERAMIC CHIP	0.022uF	50V	
C204	1-126-961-11	ELECT	2.2uF	20.00% 50V	
C205	1-163-033-91	CERAMIC CHIP	0.022uF	50V	
C206	1-126-961-11	ELECT	2.2uF	20.00% 50V	
C207	1-126-916-11	ELECT	1000uF	20.00% 6.3V	
C208	1-163-117-00	CERAMIC CHIP	100PF	5% 50V	
C209	1-126-925-11	ELECT	470uF	20.00% 10V	

Ref. No.	Part No.	Description			Remarks
C301	1-126-960-11	ELECT	1uF	20.00% 50V	
C302	1-130-479-00	MYLAR	0.0047uF	5% 50V	
C303	1-136-165-00	MYLAR	0.1uF	5.00% 50V	
C305	1-126-964-11	ELECT	10uF	20.00% 50V	
C306	1-126-960-11	ELECT	1uF	20.00% 50V	
C307	1-126-959-11	ELECT	0.47uF	20.00% 50V	
C308	1-126-964-11	ELECT	10uF	20.00% 50V	
C309	1-137-194-81	MYLAR	0.47uF	5.00% 50V	
C310	1-163-005-11	CERAMIC CHIP	470PF	10% 50V	
C311	1-126-964-11	ELECT	10uF	20.00% 50V	
C312	1-126-959-11	ELECT	0.47uF	20.00% 50V	
C313	1-163-009-11	CERAMIC CHIP	0.001uF	10% 50V	
C314	1-126-964-11	ELECT	10uF	20.00% 50V	
C315	1-126-963-11	ELECT	4.7uF	20.00% 50V	
C316	1-126-933-11	ELECT	100uF	20.00% 16V	
C317	1-104-665-11	ELECT	100uF	20.00% 10V	
C318	1-126-964-11	ELECT	10uF	20.00% 50V	
C319	1-126-961-11	ELECT	2.2uF	20.00% 50V	
C320	1-126-961-11	ELECT	2.2uF	20.00% 50V	
C321	1-163-131-00	CERAMIC CHIP	390PF	5% 50V	
C322	1-163-117-00	CERAMIC CHIP	100PF	5% 50V	
C323	1-136-157-00	MYLAR	0.022uF	5.00% 50V	
C324	1-126-964-11	ELECT	10uF	20.00% 50V	
C325	1-126-965-11	ELECT	22uF	20.00% 50V	
C326	1-163-131-00	CERAMIC CHIP	390PF	5% 50V	
C327	1-104-665-11	ELECT	100uF	20.00% 10V	
C328	1-163-117-00	CERAMIC CHIP	100PF	5% 50V	
C329	1-130-483-00	MYLAR	0.01uF	5% 50V	
C330	1-126-964-11	ELECT	10uF	20.00% 50V	
C331	1-126-965-11	ELECT	22uF	20.00% 50V	
C332	1-137-427-11	MYLAR	120PF	5.00% 50V	
C333	1-163-003-11	CERAMIC CHIP	330PF	10% 50V	
C334	1-163-103-00	CERAMIC CHIP	27PF	5% 50V	
C335	1-137-393-11	MYLAR	0.01uF	5.00% 100V	
C336	1-126-961-11	ELECT	2.2uF	20.00% 50V	
C337	1-136-155-00	FILM	0.015uF	5% 50V	
C338	1-130-481-00	MYLAR	0.0068uF	5% 50V	
C339	1-130-481-00	MYLAR	0.0068uF	5% 50V	
C340	1-136-156-00	MYLAR	0.018uF	5.00% 50V	
C341	1-126-960-11	ELECT	1uF	20.00% 50V	
C342	1-104-664-11	ELECT	47uF	20.00% 16V	
C351	1-126-960-11	ELECT	1uF	20.00% 50V	
C352	1-130-479-00	MYLAR	0.0047uF	5% 50V	
C353	1-136-165-00	MYLAR	0.1uF	5.00% 50V	
C355	1-126-964-11	ELECT	10uF	20.00% 50V	
C356	1-126-960-11	ELECT	1uF	20.00% 50V	
C357	1-126-959-11	ELECT	0.47uF	20.00% 50V	
C358	1-126-964-11	ELECT	10uF	20.00% 50V	
C359	1-137-194-81	MYLAR	0.47uF	5.00% 50V	
C360	1-163-005-11	CERAMIC CHIP	470PF	10% 50V	
C362	1-163-017-00	CERAMIC CHIP	0.0047uF	5% 50V	
C363	1-163-017-00	CERAMIC CHIP	0.0047uF	5% 50V	
C368	1-126-964-11	ELECT	10uF	20.00% 50V	
C369	1-126-961-11	ELECT	2.2uF	20.00% 50V	
C370	1-126-961-11	ELECT	2.2uF	20.00% 50V	

Ref. No.	Part No.	Description			Remarks
C371	1-163-131-00	CERAMIC CHIP	390PF	5%	50V
C372	1-163-117-00	CERAMIC CHIP	100PF	5%	50V
C373	1-136-157-00	MYLAR	0.022uF	5.00%	50V
C374	1-126-964-11	ELECT	10uF	20.00%	50V
C375	1-126-965-11	ELECT	22uF	20.00%	50V
C376	1-163-131-00	CERAMIC CHIP	390PF	5%	50V
C377	1-104-665-11	ELECT	100uF	20.00%	10V
C378	1-163-117-00	CERAMIC CHIP	100PF	5%	50V
C379	1-130-483-00	MYLAR	0.01uF	5%	50V
C380	1-126-964-11	ELECT	10uF	20.00%	50V
C381	1-126-965-11	ELECT	22uF	20.00%	50V
C382	1-137-427-11	MYLAR	120PF	5.00%	50V
C383	1-163-003-11	CERAMIC CHIP	330PF	10%	50V
C384	1-163-103-00	CERAMIC CHIP	27PF	5%	50V
C385	1-126-964-11	ELECT	10uF	20.00%	50V
C410	1-163-233-11	CERAMIC CHIP	18PF	5.00%	50V
C411	1-163-231-11	CERAMIC CHIP	15PF	5.00%	50V
C414	1-163-038-91	CERAMIC CHIP	0.1uF		25V
C462	1-104-665-11	ELECT	100uF	20.00%	10V
C464	1-163-031-11	CERAMIC CHIP	0.01uF		50V
C497	1-126-964-11	ELECT	10uF	20.00%	50V
C498	1-163-038-91	CERAMIC CHIP	0.1uF		25V
C501	1-136-165-00	MYLAR	0.1uF	5.00%	50V
C502	1-136-165-00	MYLAR	0.1uF	5.00%	50V
C503	1-126-964-11	ELECT	10uF	20.00%	50V
C504	1-109-953-11	ELECT	2.2uF	20.00%	50V
C505	1-163-038-91	CERAMIC CHIP	0.1uF		25V
C601	1-163-031-11	CERAMIC CHIP	0.01uF		50V
C602	1-163-031-11	CERAMIC CHIP	0.01uF		50V
					(EXCEPT US,CND)
C603	1-104-664-11	ELECT	47uF	20.00%	16V
C604	1-163-031-11	CERAMIC CHIP	0.01uF		50V
C605	1-163-031-11	CERAMIC CHIP	0.01uF		50V
C607	1-216-295-91	SHORT	0(AR,AUS,E,EA,KR,MX,MY,SP,TH,TW)		
C607	1-163-031-11	CERAMIC CHIP	0.01uF		50V
					(AED,AEP,CIS,CND,G,UK,US)
C611	1-104-664-11	ELECT	47uF	20.00%	16V
C612	1-163-031-11	CERAMIC CHIP	0.01uF		50V
C613	1-126-960-11	ELECT	1uF	20.00%	50V
C614	1-163-031-11	CERAMIC CHIP	0.01uF		50V
C615	1-163-031-11	CERAMIC CHIP	0.01uF		50V
C616	1-163-021-91	CERAMIC CHIP	0.01uF	10.00%	50V
					(AR,AUS,E,EA,KR,MX,MY,SP,TH,TW)
C616	1-163-023-00	CERAMIC CHIP	0.015uF	5%	50V
					(AED,AEP,CIS,CND,G,UK,US)
C617	1-163-021-91	CERAMIC CHIP	0.01uF	10.00%	50V
					(AR,AUS,E,EA,KR,MX,MY,SP,TH,TW)
C617	1-163-023-00	CERAMIC CHIP	0.015uF	5%	50V
					(AED,AEP,CIS,CND,G,UK,US)
C618	1-126-957-11	ELECT	0.22uF	20.00%	50V
C619	1-163-075-00	CERAMIC CHIP	0.047uF	50V	
C620	1-126-962-11	ELECT	3.3uF	20.00%	50V
C621	1-126-962-11	ELECT	3.3uF	20.00%	50V
C622	1-104-664-11	ELECT	47uF	20.00%	16V
C623	1-126-964-11	ELECT	10uF	20.00%	50V
C624	1-126-960-11	ELECT	1uF	20.00%	50V

Ref. No.	Part No.	Description			Remarks
C625	1-163-125-00	CERAMIC CHIP	220PF	5%	50V
					(CND,US,AR,AUS,E,EA,KR,MX,MY,SP,TH,TW)
C625	1-163-137-00	CERAMIC CHIP	680PF	5%	50V
					(AED,AEP,CIS,G,UK)
C626	1-104-760-11	CERAMIC CHIP	0.047uF	10.00%	50V
C628	1-163-117-00	CERAMIC CHIP	100PF	5%	50V
					(CND,US,AR,AUS,E,EA,KR,MX,MY,SP,TH,TW)
C628	1-163-133-00	CERAMIC CHIP	470PF	5%	50V
					(AED,AEP,CIS,G,UK)
C629	1-126-965-11	ELECT	22uF	20.00%	50V
C630	1-126-964-11	ELECT	10uF	20.00%	50V
C631	1-163-031-11	CERAMIC CHIP	0.01uF		50V
C632	1-126-933-11	ELECT	100uF	20.00%	16V
C633	1-163-031-11	CERAMIC CHIP	0.01uF		50V
C634	1-163-016-00	CERAMIC CHIP	0.0039uF	10%	50V
C635	1-163-016-00	CERAMIC CHIP	0.0039uF	10%	50V
C636	1-163-021-91	CERAMIC CHIP	0.01uF	10.00%	50V
C637	1-163-021-91	CERAMIC CHIP	0.01uF	10.00%	50V
C638	1-163-135-00	CERAMIC CHIP	560PF	5%	50V
					(AED,AEP,CIS,G,UK)
C641	1-163-031-11	CERAMIC CHIP	0.01uF		50V
C644	1-163-087-00	CERAMIC CHIP	4PF		50V
C645	1-163-031-11	CERAMIC CHIP	0.01uF		50V
C647	1-163-105-00	CERAMIC CHIP	33PF	5%	50V
					(AED,AEP,CIS,G,UK)
C651	1-163-239-11	CERAMIC CHIP	33PF	5.00%	50V
C652	1-163-235-11	CERAMIC CHIP	22PF	5.00%	50V
C653	1-163-009-11	CERAMIC CHIP	0.001uF	10%	50V
C655	1-163-009-11	CERAMIC CHIP	0.001uF	10%	50V
C656	1-163-031-11	CERAMIC CHIP	0.01uF		50V
C657	1-104-664-11	ELECT	47uF	20.00%	16V
C658	1-126-961-11	ELECT	2.2uF	20.00%	50V
C659	1-163-031-11	CERAMIC CHIP	0.01uF		50V
C660	1-104-664-11	ELECT	47uF	20.00%	16V
C661	1-163-031-11	CERAMIC CHIP	0.01uF		50V
C662	1-126-959-11	ELECT	0.47uF	20.00%	50V
C663	1-163-031-11	CERAMIC CHIP	0.01uF		50V
C669	1-163-031-11	CERAMIC CHIP	0.01uF		50V
C681	1-126-964-11	ELECT	10uF	20.00%	50V
					(AED,AEP,CIS,G,UK)
C682	1-163-135-00	CERAMIC CHIP	560PF	5%	50V
					(AED,AEP,CIS,G,UK)
C683	1-163-038-91	CERAMIC CHIP	0.1uF		25V
					(AED,AEP,CIS,G,UK)
C684	1-104-664-11	ELECT	47uF	20.00%	16V
					(AED,AEP,CIS,G,UK)
C685	1-126-964-11	ELECT	10uF	20.00%	50V
					(AED,AEP,CIS,G,UK)
C686	1-126-961-11	ELECT	2.2uF	20.00%	50V
					(AED,AEP,CIS,G,UK)
C687	1-163-129-00	CERAMIC CHIP	330PF	5%	50V
					(AED,AEP,CIS,G,UK)
C688	1-163-031-11	CERAMIC CHIP	0.01uF		50V
					(AED,AEP,CIS,G,UK)

MAIN

Ref. No.	Part No.	Description				Remarks
C689	1-163-135-00	CERAMIC CHIP	560PF	5%	50V	(AED,AEP,CIS,G,UK)
C690	1-126-961-11	ELECT	2.2uF	20.00%	50V	(AED,AEP,CIS,G,UK)
C691	1-163-031-11	CERAMIC CHIP	0.01uF		50V	(AED,AEP,CIS,G,UK)
C692	1-163-245-11	CERAMIC CHIP	56PF	5.00%	50V	(AED,AEP,CIS,G,UK)
C693	1-163-245-11	CERAMIC CHIP	56PF	5.00%	50V	(AED,AEP,CIS,G,UK)
C694	1-163-031-11	CERAMIC CHIP	0.01uF		50V	(AED,AEP,CIS,G,UK)
C695	1-163-031-11	CERAMIC CHIP	0.01uF		50V	(AED,AEP,CIS,G,UK)
C801	1-163-038-91	CERAMIC CHIP	0.1uF		25V	(AED,AEP,CIS,G,UK)
C802	1-163-038-91	CERAMIC CHIP	0.1uF		25V	(AED,AEP,CIS,G,UK)
C803	1-163-031-11	CERAMIC CHIP	0.01uF		50V	
C821	1-104-665-11	ELECT	100uF	20.00%	10V	
C822	1-126-961-11	ELECT	2.2uF	20.00%	50V	
C823	1-126-968-11	ELECT	100uF	20.00%	50V	
C824	1-126-960-11	ELECT	1uF	20.00%	50V	
C841	1-126-959-11	ELECT	0.47uF	20.00%	50V	
C851	1-163-038-91	CERAMIC CHIP	0.1uF		25V	(AED,AEP,CIS,G,UK)
C852	1-163-038-91	CERAMIC CHIP	0.1uF		25V	(AED,AEP,CIS,G,UK)
C853	1-163-031-11	CERAMIC CHIP	0.01uF		50V	
C861	1-107-717-11	ELECT	47uF	20.00%	50V	
C862	1-107-721-11	ELECT	4.7uF	20.00%	100V	
C863	1-107-721-11	ELECT	4.7uF	20.00%	100V	
C891	1-126-964-11	ELECT	10uF	20.00%	50V	(AR,AUS,E,EA,KR,MX,MY,SP,TH,TW)
C892	1-163-038-91	CERAMIC CHIP	0.1uF		25V	(AR,AUS,E,EA,KR,MX,MY,SP,TH,TW)
C901	1-126-944-11	ELECT	3300uF	20.00%	25V	(AR,AUS,E,EA,KR,MX,MY,SP,TH,TW)
C901	1-126-936-11	ELECT	3300uF	20.00%	16V	(AED,AEP,CIS,CND,G,UK,US)
C902	1-136-165-00	MYLAR	0.1uF	5.00%	50V	
C903	1-136-165-00	MYLAR	0.1uF	5.00%	50V	
C905	1-136-165-00	MYLAR	0.1uF	5.00%	50V	
C906	1-136-165-00	MYLAR	0.1uF	5.00%	50V	
C907	1-126-937-11	ELECT	4700uF	20.00%	16V	
C908	1-126-942-61	ELECT	1000uF	20.00%	25V	
C909	1-126-952-11	ELECT	1000uF	20.00%	35V	
C911	1-126-960-11	ELECT	1uF	20.00%	50V	
C912	1-126-916-11	ELECT	1000uF	20.00%	6.3V	
C921	1-126-960-11	ELECT	1uF	20.00%	50V	
C922	1-126-933-11	ELECT	100uF	20.00%	16V	
C931	1-126-964-11	ELECT	10uF	20.00%	50V	
C932	1-126-935-11	ELECT	470uF	20.00%	16V	
C951	1-126-960-11	ELECT	1uF	20.00%	50V	
C952	1-104-665-11	ELECT	100uF	20.00%	10V	
C961	1-126-960-11	ELECT	1uF	20.00%	50V	
C962	1-126-926-11	ELECT	1000uF	20.00%	10V	

Ref. No.	Part No.	Description	Remarks
		< FILTER >	
CF601	1-760-023-11	FILTER, CERAMIC	(CND,US,AR,AUS,E,EA,KR,MX,MY,SP,TH,TW)
CF601	1-579-185-21	FILTER, CERAMIC (AED,AEP,CIS,G,UK)	
CF602	1-760-023-11	FILTER, CERAMIC	(CND,US,AR,AUS,E,EA,KR,MX,MY,SP,TH,TW)
CF602	1-579-185-21	FILTER, CERAMIC (AED,AEP,CIS,G,UK)	
		< CONNECTOR >	
CN202	1-785-336-11	PIN, CONNECTOR(LIGHT ANGLE)10P	
* CN201	1-569-913-11	SOCKET, CONNECTOR 19P	
* CN301	1-568-449-11	HOUSING, CONNECTOR(PC BOARD)3P	
* CN304	1-569-934-11	SOCKET, CONNECTOR 17P	
CN401	1-793-766-11	CONNECTOR, BOARD TO BOARD 30P	
* CN891	1-564-506-11	PLUG, CONNECTOR 3P	(AR,AUS,E,EA,KR,MX,MY,SP,TH,TW)
CN901	1-778-982-11	CONNECTOR, BOARD TO BOARD 13P	
CN902	1-778-982-11	CONNECTOR, BOARD TO BOARD 13P	
		< DIODE >	
D501	8-719-988-61	DIODE 1SS355TE-17	
D502	8-719-988-61	DIODE 1SS355TE-17	
D503	8-719-988-61	DIODE 1SS355TE-17	
D504	8-719-988-61	DIODE 1SS355TE-17	
D505	8-719-988-61	DIODE 1SS355TE-17	
D506	8-719-988-61	DIODE 1SS355TE-17	
D508	8-719-988-61	DIODE 1SS355TE-17	
D509	8-719-988-61	DIODE 1SS355TE-17	
D510	8-719-988-61	DIODE 1SS355TE-17	
D511	8-719-988-61	DIODE 1SS355TE-17	
D601	8-719-056-83	DIODE UDZ-TE-17-6.8B	
D641	8-719-914-42	DIODE DA204K-T-146	
D651	8-719-988-61	DIODE 1SS355TE-17	
D681	8-719-988-61	DIODE 1SS355TE-17 (AED,AEP,CIS,G,UK)	
D801	8-719-988-61	DIODE 1SS355TE-17	
D822	8-719-988-61	DIODE 1SS355TE-17	
D841	8-719-988-61	DIODE 1SS355TE-17	
D861	8-719-988-61	DIODE 1SS355TE-17	
D891	8-719-988-61	DIODE 1SS355TE-17	(AR,AUS,E,EA,KR,MX,MY,SP,TH,TW)
D892	8-719-988-61	DIODE 1SS355TE-17	(AR,AUS,E,EA,KR,MX,MY,SP,TH,TW)
D901	8-719-200-82	DIODE 11ES2-TB5	
D902	8-719-200-82	DIODE 11ES2-TB5	
D903	8-719-200-82	DIODE 11ES2-TB5	
D904	8-719-200-82	DIODE 11ES2-TB5	
D906	8-719-200-82	DIODE 11ES2-TB5	
D907	8-719-200-82	DIODE 11ES2-TB5	
D908	8-719-200-82	DIODE 11ES2-TB5	
D909	8-719-200-82	DIODE 11ES2-TB5	
D910	8-719-200-82	DIODE 11ES2-TB5	
D911	8-719-200-82	DIODE 11ES2-TB5	
D952	8-719-988-61	DIODE 1SS355TE-17	
D953	8-719-988-61	DIODE 1SS355TE-17	
D957	8-719-988-61	DIODE 1SS355TE-17 (TH)	

Ref. No.	Part No.	Description	Remarks
		< FERRITE BEAD >	
FB201	1-216-295-91	SHORT 0	
FB202	1-216-295-91	SHORT 0	
FB203	1-216-295-91	SHORT 0	
FB204	1-216-295-91	SHORT 0	
FB416	1-216-295-91	SHORT 0	
FB462	1-216-295-91	SHORT 0	
FB499	1-216-295-91	SHORT 0	
		< FRONT END >	
FE601	1-693-477-11	FRONT END (3 GANGS) (AR,AUS,E,EA,KR,MX,MY,SP,TH,TW)	
FE602	1-693-478-11	FRONT END (FM3 GANGS)(CND,US)	
FE603	1-693-496-11	FRONT END (4 GANG) (AED,AEP,CIS,G,UK)	
		< IC >	
IC104	8-759-099-06	IC M5218AFP-TE1 (AR,AUS,E,EA,KR,MX,TH)	
IC101	8-759-652-04	IC M61504FP-TP	
IC102	8-759-099-06	IC M5218AFP-TE1	
IC201	8-749-923-04	IC TOTX178A (OPTICAL)	
IC302	8-759-143-54	IC uPC1330HA	
IC303	8-759-656-83	IC NJM4580MD-TE	
IC304	8-759-656-83	IC NJM4580MD-TE	
IC301	8-759-652-80	IC HA12227F	
IC401	8-759-652-48	IC M30622MAA-A25FP	
IC501	8-759-635-63	IC M51943BSL-TP	
IC601	8-759-652-00	IC BA1450	
IC651	8-759-288-54	IC LC72130	
IC681	8-759-099-06	IC M5218AFP-TE1 (AED,AEP,CIS,G,UK)	
IC682	8-759-541-48	IC BU1924 (AED,AEP,CIS,G,UK)	
IC911	8-759-039-69	IC uPC7805AHF	
IC921	8-759-088-08	IC uPC7812AHF	
IC931	8-759-604-86	IC M5F7807L	
IC951	8-759-158-62	IC TA78057S	
IC961	8-759-701-59	IC M5F7809L	
		< IFT >	
IFT601	1-435-295-11	TRANSFORMER, IF	
		< JACK >	
J101	1-793-987-11	JACK, PIN 2P (MD VIDEO)	
		< JUMPER RESISTOR >	
JR1	1-216-296-91	SHORT 0	
JR2	1-216-296-91	SHORT 0	
JR3	1-216-296-91	SHORT 0	
JR4	1-216-296-91	SHORT 0	
JR6	1-216-296-91	SHORT 0	
JR7	1-216-296-91	SHORT 0	
JR8	1-216-295-91	SHORT 0	
JR9	1-216-296-91	SHORT 0	
JR10	1-216-296-91	SHORT 0	
JR11	1-216-296-91	SHORT 0	
JR12	1-216-296-91	SHORT 0	
JR13	1-216-296-91	SHORT 0	
JR14	1-216-296-91	SHORT 0	
JR15	1-216-296-91	SHORT 0	
JR16	1-216-295-91	SHORT 0	
JR17	1-216-296-91	SHORT 0	
JR18	1-216-295-91	SHORT 0	
JR19	1-216-296-91	SHORT 0	
JR21	1-216-295-91	SHORT 0	
JR22	1-216-296-91	SHORT 0	
JR23	1-216-296-91	SHORT 0	
JR24	1-216-296-91	SHORT 0	
JR25	1-216-296-91	SHORT 0	
JR26	1-216-296-91	SHORT 0	
JR27	1-216-296-91	SHORT 0	
JR28	1-216-295-91	SHORT 0	
JR29	1-216-296-91	SHORT 0	
JR30	1-216-296-91	SHORT 0 (TH)	
JR31	1-216-296-91	SHORT 0 (TH)	
JR32	1-216-296-91	SHORT 0 (TH)	
JR33	1-216-296-91	SHORT 0 (TH)	
JR34	1-216-295-91	SHORT 0 (TH)	
JR35	1-216-296-91	SHORT 0 (TH)	
JR36	1-216-295-91	SHORT 0 (TH)	
JR37	1-216-296-91	SHORT 0 (TH)	
JR38	1-216-296-91	SHORT 0 (TH)	
JR39	1-216-296-91	SHORT 0 (TH)	
JR41	1-216-296-91	SHORT 0 (TH)	
JR42	1-216-295-91	SHORT 0 (TH)	
JR43	1-216-296-91	SHORT 0 (TH)	
JR44	1-216-296-91	SHORT 0 (TH)	
JR45	1-216-296-91	SHORT 0 (TH)	
JR50	1-216-296-91	SHORT 0 (AED,AEP,CIS,CND,G,UK,US)	
JR51	1-216-296-91	SHORT 0 (TH)	
JR609	1-216-295-91	SHORT 0(AR,AUS,E,EA,KR,MX,MY,SP,TH,TW)	
JR601	1-216-296-91	SHORT 0 (EXCEPT US,CND)	
JR602	1-216-295-91	SHORT 0	
JR603	1-216-296-91	SHORT 0	
JR604	1-216-296-91	SHORT 0	
JR605	1-216-296-91	SHORT 0	
JR606	1-216-296-91	SHORT 0	
JR607	1-216-295-91	SHORT 0	
JR608	1-216-296-91	SHORT 0	
JR612	1-216-295-91	SHORT 0 (CND,US)	
JR611	1-216-296-91	SHORT 0	
JR614	1-216-295-91	SHORT 0 (AED,AEP,CIS,G,UK)	
JR615	1-216-295-91	SHORT 0	
JR616	1-216-295-91	SHORT 0	
JR619	1-216-295-91	SHORT 0	
JR632	1-216-295-91	SHORT 0 (CND,US)	
JR634	1-216-295-91	SHORT 0	
JR636	1-216-295-91	SHORT 0 (AED,AEP,CIS,G,UK)	
JR640	1-216-295-91	SHORT 0 (CND,US,AR,AUS,E,EA,KR,MX,MY,SP,TH,TW)	
JR641	1-216-295-91	SHORT 0 (AED,AEP,CIS,G,UK)	
JR907	1-216-295-91	SHORT 0 (AED,AEP,CIS,CND,G,UK,US)	

MAIN

Ref. No.	Part No.	Description	Remarks
JR910	1-216-295-91	SHORT 0 (AED,AEP,CIS,CND,G,UK,US)	
JR928	1-216-295-91	SHORT 0 (AR,AUS,E,EA,KR,MX,MY,SP,TW)	
JR923	1-216-295-91	SHORT 0	
JR924	1-216-295-91	SHORT 0	
		< COIL >	
L201	1-414-189-31	INDUCTOR 100uH	
L301	1-410-780-11	INDUCTOR 27MH	
L302	1-414-193-41	INDUCTOR 220uH	
L303	1-414-193-41	INDUCTOR 220uH	
L351	1-410-780-11	INDUCTOR 27MH	
L641	1-408-765-21	INDUCTOR CHIP 1uH (AED,AEP,CIS,G,UK)	
L642	1-216-296-91	SHORT 0 (CND,US,AR,AUS,E,EA,KR,MX,MY,SP,TH,TW)	
L642	1-408-783-00	INDUCTOR CHIP 33uH (AED,AEP,CIS,G,UK)	
L681	1-408-789-21	INDUCTOR CHIP 100uH (AED,AEP,CIS,G,UK)	
L801	1-420-872-00	COIL, AIR-CORE (AED,AEP,CIS,G,UK)	
L851	1-420-872-00	COIL, AIR-CORE (AED,AEP,CIS,G,UK)	
		< FILTER >	
LPF601	1-234-458-11	FILTER, LOW PASS	
LPF602	1-234-458-11	FILTER, LOW PASS	
		< TRANSISTOR >	
Q101	8-729-120-28	TRANSISTOR 2SC1623-T1-L5L6	
Q102	8-729-144-85	TRANSISTOR 2SK1133-T1B	
Q103	8-729-107-46	TRANSISTOR 2SC3624A-T1L15L16	
Q104	8-729-120-28	TRANSISTOR 2SC1623-T1-L5L6	
Q141	8-729-120-28	TRANSISTOR 2SC1623-T1-L5L6	
Q151	8-729-120-28	TRANSISTOR 2SC1623-T1-L5L6	
Q152	8-729-144-85	TRANSISTOR 2SK1133-T1B	
Q153	8-729-107-46	TRANSISTOR 2SC3624A-T1L15L16	
Q154	8-729-120-28	TRANSISTOR 2SC1623-T1-L5L6	
Q301	8-729-801-93	TRANSISTOR 2SD1387-34-TP	
Q302	8-729-142-46	TRANSISTOR 2SC2001TP-LK	
Q303	8-729-142-46	TRANSISTOR 2SC2001TP-LK	
Q304	8-729-113-78	TRANSISTOR FN1F4N-T1M35	
Q305	8-729-113-13	TRANSISTOR FA1A4M-T1L33	
Q391	8-729-140-04	TRANSISTOR 2SB1116-TP-LK	
Q392	8-729-113-13	TRANSISTOR FA1A4M-T1L33	
Q393	8-729-140-04	TRANSISTOR 2SB1116-TP-LK	
Q394	8-729-113-13	TRANSISTOR FA1A4M-T1L33	
Q395	8-729-113-13	TRANSISTOR FA1A4M-T1L33	
Q396	8-729-116-57	TRANSISTOR 2SB1068TP-K	
Q397	8-729-113-13	TRANSISTOR FA1A4M-T1L33	
Q501	8-729-120-28	TRANSISTOR 2SC1623-T1-L5L6	
Q503	8-729-113-13	TRANSISTOR FA1A4M-T1L33	
Q504	8-729-113-78	TRANSISTOR FN1F4N-T1M35	
Q505	8-729-113-13	TRANSISTOR FA1A4M-T1L33	
Q506	8-729-113-13	TRANSISTOR FA1A4M-T1L33	
Q601	8-729-201-27	TRANSISTOR 2SC2715Y-TE85L	
Q602	8-729-422-57	TRANSISTOR BN1A4M-TP	
Q611	8-729-120-28	TRANSISTOR 2SC2412K-T-146-QR	
Q612	8-729-120-28	TRANSISTOR 2SC2412K-T-146-QR	

Ref. No.	Part No.	Description	Remarks
Q821	8-729-120-28	TRANSISTOR 2SC1623-T1-L5L6	
Q822	8-729-120-28	TRANSISTOR 2SC1623-T1-L5L6	
Q823	8-729-216-22	TRANSISTOR 2SA812-T1-M5M6	
Q824	8-729-113-13	TRANSISTOR FA1A4M-T1L33	
Q825	8-729-120-28	TRANSISTOR 2SC1623-T1-L5L6	
Q828	8-729-120-28	TRANSISTOR 2SC1623-T1-L5L6	
Q829	8-729-120-28	TRANSISTOR 2SC1623-T1-L5L6	
Q861	8-729-113-78	TRANSISTOR FN1F4N-T1M35	
Q862	8-729-107-46	TRANSISTOR 2SC3624A-T1L15L16	
Q863	8-729-107-46	TRANSISTOR 2SC3624A-T1L15L16	
Q891	8-729-140-04	TRANSISTOR 2SB1116-TP-LK (AR,AUS,E,EA,KR,MX,MY,SP,TH,TW)	
Q892	8-729-620-05	TRANSISTOR 2SC2603TP-EF (AR,AUS,E,EA,KR,MX,MY,SP,TH,TW)	
Q911	8-729-049-79	TRANSISTOR RT1P137S-TP	
Q912	8-729-113-13	TRANSISTOR FA1A4M-T1L33	
		< RESISTOR >	
R101	1-216-049-91	RES-CHIP 1K 5% 1/10W	
R103	1-216-073-00	METAL CHIP 10K 5% 1/10W	
R104	1-216-073-00	METAL CHIP 10K 5% 1/10W	
R105	1-216-097-91	RES-CHIP 100K 5% 1/10W	(TH)
R107	1-216-105-91	RES-CHIP 220K 5% 1/10W	
R108	1-216-097-91	RES-CHIP 100K 5% 1/10W	
R109	1-216-073-00	METAL CHIP 10K 5% 1/10W	
R110	1-216-045-00	METAL CHIP 680 5% 1/10W	
R111	1-216-073-00	METAL CHIP 10K 5% 1/10W	
R112	1-216-089-91	RES-CHIP 47K 5% 1/10W	
R113	1-216-057-00	METAL CHIP 2.2K 5% 1/10W	
R114	1-216-097-91	RES-CHIP 100K 5% 1/10W	
R115	1-216-073-00	METAL CHIP 10K 5% 1/10W	
R116	1-216-049-91	RES-CHIP 1K 5% 1/10W	
R118	1-216-073-00	METAL CHIP 10K 5% 1/10W	
R119	1-216-103-00	METAL CHIP 180K 5% 1/10W	
R121	1-216-296-91	SHORT 0 (TH)	
R121	1-216-222-00	RES-CHIP 10K 5% 1/8W (AR,AUS,E,EA,KR,MX,MY,SP,TW)	
R122	1-216-073-00	METAL CHIP 10K 5% 1/10W (AR,AUS,E,EA,KR,MX,MY,SP,TH,TW)	
R123	1-216-073-00	METAL CHIP 10K 5% 1/10W (AR,AUS,E,EA,KR,MX,MY,SP,TH,TW)	
R124	1-216-065-91	RES-CHIP 4.7K 5% 1/10W (AR,AUS,E,EA,KR,MX,MY,SP,TH,TW)	
R125	1-216-073-00	METAL CHIP 10K 5% 1/10W	
R132	1-216-025-91	RES-CHIP 100 5% 1/10W	
R133	1-216-025-91	RES-CHIP 100 5% 1/10W	
R134	1-216-059-00	METAL CHIP 2.7K 5% 1/10W	
R141	1-216-049-91	RES-CHIP 1K 5% 1/10W	
R142	1-216-051-00	METAL CHIP 1.2K 5% 1/10W	
R143	1-216-089-91	RES-CHIP 47K 5% 1/10W	
R144	1-216-295-91	SHORT 0	
R145	1-216-041-00	METAL CHIP 470 5% 1/10W	
R146	1-216-041-00	METAL CHIP 470 5% 1/10W	
R147	1-216-041-00	METAL CHIP 470 5% 1/10W	
R151	1-216-049-91	RES-CHIP 1K 5% 1/10W	
R153	1-216-073-00	METAL CHIP 10K 5% 1/10W	
R154	1-216-073-00	METAL CHIP 10K 5% 1/10W	

Ref. No.	Part No.	Description			Remarks
R155	1-216-097-91	RES-CHIP	100K	5%	1/10W
					(TH)
R157	1-216-105-91	RES-CHIP	220K	5%	1/10W
R158	1-216-097-91	RES-CHIP	100K	5%	1/10W
R159	1-216-073-00	METAL CHIP	10K	5%	1/10W
R160	1-216-045-00	METAL CHIP	680	5%	1/10W
R161	1-216-073-00	METAL CHIP	10K	5%	1/10W
R162	1-216-089-91	RES-CHIP	47K	5%	1/10W
R163	1-216-057-00	METAL CHIP	2.2K	5%	1/10W
R164	1-216-097-91	RES-CHIP	100K	5%	1/10W
R165	1-216-073-00	METAL CHIP	10K	5%	1/10W
R166	1-216-049-91	RES-CHIP	1K	5%	1/10W
R168	1-216-073-00	METAL CHIP	10K	5%	1/10W
R169	1-216-103-00	METAL CHIP	180K	5%	1/10W
R171	1-216-073-00	METAL CHIP	10K	5%	1/10W
			(AR,AUS,E,EA,KR,MX,MY,SP,TH,TW)		
R172	1-216-073-00	METAL CHIP	10K	5%	1/10W
			(AR,AUS,E,EA,KR,MX,MY,SP,TH,TW)		
R173	1-216-073-00	METAL CHIP	10K	5%	1/10W
			(AR,AUS,E,EA,KR,MX,MY,SP,TH,TW)		
R175	1-216-073-00	METAL CHIP	10K	5%	1/10W
R201	1-216-025-91	RES-CHIP	100	5%	1/10W
R202	1-216-085-00	METAL CHIP	33K	5%	1/10W
R203	1-216-025-91	RES-CHIP	100	5%	1/10W
R204	1-216-085-00	METAL CHIP	33K	5%	1/10W
R301	1-216-085-00	METAL CHIP	33K	5%	1/10W
R302	1-216-057-00	METAL CHIP	2.2K	5%	1/10W
R303	1-216-025-91	RES-CHIP	100	5%	1/10W
R304	1-216-025-91	RES-CHIP	100	5%	1/10W
R305	1-216-057-00	METAL CHIP	2.2K	5%	1/10W
R306	1-216-071-00	METAL CHIP	8.2K	5%	1/10W
R307	1-216-065-91	RES-CHIP	4.7K	5%	1/10W
R308	1-216-071-00	METAL CHIP	8.2K	5%	1/10W
R309	1-216-081-00	METAL CHIP	22K	5%	1/10W
R311	1-216-121-91	RES-CHIP	1M	5%	1/10W
R312	1-216-102-00	RES-CHIP	160K	5%	1/10W
R313	1-216-097-91	RES-CHIP	100K	5%	1/10W
R315	1-216-073-00	METAL CHIP	10K	5%	1/10W
R316	1-216-235-00	RES-CHIP	36K	5%	1/8W
					(TH)
R316	1-216-228-00	RES-CHIP	18K	5%	1/8W
					(EXCEPT TH)
R317	1-216-222-00	RES-CHIP	10K	5%	1/8W
R318	1-216-073-00	METAL CHIP	10K	5%	1/10W
R319	1-216-111-00	METAL CHIP	390K	5%	1/10W
R320	1-216-057-00	METAL CHIP	2.2K	5%	1/10W
R321	1-216-071-00	METAL CHIP	8.2K	5%	1/10W
R331	1-216-099-00	METAL CHIP	120K	5%	1/10W
R332	1-216-025-91	RES-CHIP	100	5%	1/10W
R333	1-216-067-00	METAL CHIP	5.6K	5%	1/10W
R334	1-216-100-00	RES-CHIP	130K	5%	1/10W
R335	1-216-033-00	METAL CHIP	220	5%	1/10W
R336	1-216-099-00	METAL CHIP	120K	5%	1/10W
R337	1-216-033-00	METAL CHIP	220	5%	1/10W
R338	1-216-081-00	METAL CHIP	22K	5%	1/10W
R339	1-216-075-00	METAL CHIP	12K	5%	1/10W

Ref. No.	Part No.	Description			Remarks
R340	1-216-107-00	METAL CHIP	270K	5%	1/10W
R341	1-216-033-00	METAL CHIP	220	5%	1/10W
R342	1-216-075-00	METAL CHIP	12K	5%	1/10W
R343	1-219-787-17	FUSIBLE	5.6	5%	1/4W
R344	1-219-787-17	FUSIBLE	5.6	5%	1/4W
R345	1-216-079-00	METAL CHIP	18K	5%	1/10W
R346	1-216-079-00	METAL CHIP	18K	5%	1/10W
R347	1-216-073-00	METAL CHIP	10K	5%	1/10W
R351	1-216-085-00	METAL CHIP	33K	5%	1/10W
R352	1-216-057-00	METAL CHIP	2.2K	5%	1/10W
R353	1-216-025-91	RES-CHIP	100	5%	1/10W
R354	1-216-025-91	RES-CHIP	100	5%	1/10W
R355	1-216-057-00	METAL CHIP	2.2K	5%	1/10W
R356	1-216-071-00	METAL CHIP	8.2K	5%	1/10W
R357	1-216-065-91	RES-CHIP	4.7K	5%	1/10W
R358	1-216-071-00	METAL CHIP	8.2K	5%	1/10W
R359	1-216-085-00	METAL CHIP	33K	5%	1/10W
R360	1-216-045-00	METAL CHIP	680	5%	1/10W
R361	1-216-057-00	METAL CHIP	2.2K	5%	1/10W
R363	1-216-057-00	METAL CHIP	2.2K	5%	1/10W
R364	1-216-045-00	METAL CHIP	680	5%	1/10W
R366	1-216-061-00	METAL CHIP	3.3K	5%	1/10W
R367	1-216-089-91	RES-CHIP	47K	5%	1/10W
R368	1-216-061-00	METAL CHIP	3.3K	5%	1/10W
R369	1-216-061-00	METAL CHIP	3.3K	5%	1/10W
R371	1-216-238-91	RES-CHIP	47K	5%	1/8W
R372	1-216-065-91	RES-CHIP	4.7K	5%	1/10W
R373	1-216-049-91	RES-CHIP	1K	5%	1/10W
R374	1-216-089-91	RES-CHIP	47K	5%	1/10W
R375	1-216-094-00	RES-CHIP	75K	5%	1/10W
R376	1-216-065-91	RES-CHIP	4.7K	5%	1/10W
R377	1-216-089-91	RES-CHIP	47K	5%	1/10W
R378	1-216-094-00	RES-CHIP	75K	5%	1/10W
R381	1-216-099-00	METAL CHIP	120K	5%	1/10W
R382	1-216-025-91	RES-CHIP	100	5%	1/10W
R383	1-216-067-00	METAL CHIP	5.6K	5%	1/10W
R384	1-216-100-00	RES-CHIP	130K	5%	1/10W
R385	1-216-296-91	SHORT	0		
R386	1-216-099-00	METAL CHIP	120K	5%	1/10W
R387	1-216-033-00	METAL CHIP	220	5%	1/10W
R388	1-216-081-00	METAL CHIP	22K	5%	1/10W
R389	1-216-075-00	METAL CHIP	12K	5%	1/10W
R390	1-216-107-00	METAL CHIP	270K	5%	1/10W
R391	1-216-296-91	SHORT	0		
R392	1-216-075-00	METAL CHIP	12K	5%	1/10W
R393	1-216-081-00	METAL CHIP	22K	5%	1/10W
R394	1-216-033-00	METAL CHIP	220	5%	1/10W
R396	1-216-065-91	RES-CHIP	4.7K	5%	1/10W
R407	1-216-065-91	RES-CHIP	4.7K	5%	1/10W
R409	1-216-295-91	SHORT	0		
R411	1-216-109-00	METAL CHIP	330K	5%	1/10W
R413	1-216-295-91	SHORT	0		
R417	1-216-073-00	METAL CHIP	10K	5%	1/10W
R418	1-216-025-91	RES-CHIP	100	5%	1/10W
R419	1-216-025-91	RES-CHIP	100	5%	1/10W

MAIN

Ref. No.	Part No.	Description			Remarks
R429	1-216-025-91	RES-CHIP	100	5%	1/10W
R430	1-216-025-91	RES-CHIP	100	5%	1/10W
R432	1-216-025-91	RES-CHIP	100	5%	1/10W
R433	1-216-025-91	RES-CHIP	100	5%	1/10W
R435	1-216-033-00	METAL CHIP	220	5%	1/10W
R437	1-216-033-00	METAL CHIP	220	5%	1/10W
R440	1-216-295-91	SHORT	0		
R441	1-216-295-91	SHORT	0		
R442	1-216-295-91	SHORT	0		
R443	1-216-295-91	SHORT	0 (EXCEPT EA,MX)		
R444	1-216-295-91	SHORT	0 (EXCEPT EA,MX)		
R445	1-216-295-91	SHORT	0 (EXCEPT EA,MX)		
R446	1-216-295-91	SHORT	0 (EXCEPT EA,MX)		
R447	1-216-295-91	SHORT	0 (EXCEPT EA,MX)		
R448	1-216-295-91	SHORT	0 (EXCEPT EA,MX)		
R449	1-216-295-91	SHORT	0 (EXCEPT EA,MX)		
R467	1-216-295-91	SHORT	0 (EXCEPT EA,MX)		
R468	1-216-295-91	SHORT	0 (EXCEPT EA,MX)		
R469	1-216-295-91	SHORT	0 (EXCEPT EA,MX)		
R481	1-216-025-91	RES-CHIP	100	5%	1/10W (AED,AEP,CIS,CND,G,UK,US)
R483	1-216-073-00	METAL CHIP	10K	5%	1/10W
R484	1-216-073-00	METAL CHIP	10K	5%	1/10W
R490	1-216-174-00	RES-CHIP	100	5%	1/8W
R491	1-216-174-00	RES-CHIP	100	5%	1/8W
R493	1-216-174-00	RES-CHIP	100	5%	1/8W
R494	1-216-295-91	SHORT	0		
R495	1-216-061-00	METAL CHIP	3.3K	5%	1/10W
R496	1-216-089-91	RES-CHIP	47K	5%	1/10W
R497	1-216-295-91	SHORT	0 (MY,SP,TW)		
R497	1-216-073-00	METAL CHIP	10K	5%	1/10W (EA)
R497	1-216-053-00	METAL CHIP	1.5K	5%	1/10W (AUS,KR,TH)
R497	1-216-081-00	METAL CHIP	22K	5%	1/10W (AR,E,MX)
R497	1-216-089-91	RES-CHIP	47K	5%	1/10W (AED,AEP,CIS,CND,G,UK,US)
R498	1-216-089-91	RES-CHIP	47K	5%	1/10W (AR,AUS,E,EA,KR,MX,TH)
R498	1-216-073-00	METAL CHIP	10K	5%	1/10W (CND,US)
R498	1-216-085-00	METAL CHIP	33K	5%	1/10W (AED,AEP,CIS,G,UK)
R499	1-216-025-91	RES-CHIP	100	5%	1/10W
R501	1-216-073-00	METAL CHIP	10K	5%	1/10W
R502	1-216-089-91	RES-CHIP	47K	5%	1/10W
R503	1-216-089-91	RES-CHIP	47K	5%	1/10W
R504	1-216-025-91	RES-CHIP	100	5%	1/10W
R505	1-216-065-91	RES-CHIP	4.7K	5%	1/10W
R506	1-216-041-00	METAL CHIP	470	5%	1/10W
R508	1-216-065-91	RES-CHIP	4.7K	5%	1/10W
R509	1-216-081-00	METAL CHIP	22K	5%	1/10W
R510	1-216-097-91	RES-CHIP	100K	5%	1/10W
R523	1-216-073-00	METAL CHIP	10K	5%	1/10W
R524	1-216-073-00	METAL CHIP	10K	5%	1/10W
R546	1-216-073-00	METAL CHIP	10K	5%	1/10W
R547	1-216-073-00	METAL CHIP	10K	5%	1/10W
R548	1-216-073-00	METAL CHIP	10K	5%	1/10W
R566	1-216-073-00	METAL CHIP	10K	5%	1/10W
R601	1-216-295-91	SHORT	0 (EXCEPT US,CND)		
R602	1-216-029-00	METAL CHIP	150	5%	1/10W
R603	1-216-037-00	METAL CHIP	330	5%	1/10W (AR,AUS,E,EA,KR,MX,MY,SP,TH,TW)
R603	1-216-045-00	METAL CHIP	680	5%	1/10W (AED,AEP,CIS,CND,G,UK,US)
R604	1-216-017-91	RES-CHIP	47	5%	1/10W
R605	1-216-045-00	METAL CHIP	680	5%	1/10W
R606	1-216-037-00	METAL CHIP	330	5%	1/10W
R607	1-216-053-00	METAL CHIP	1.5K	5%	1/10W
R608	1-216-017-91	RES-CHIP	47	5%	1/10W
R609	1-216-295-91	SHORT	0 (CND,US)		
R610	1-216-045-00	METAL CHIP	680	5%	1/10W
R611	1-216-182-00	RES-CHIP	220	5%	1/8W
R612	1-216-214-00	RES-CHIP	4.7K	5%	1/8W
R613	1-216-206-00	RES-CHIP	2.2K	5%	1/8W
R614	1-216-041-00	METAL CHIP	470	5%	1/10W (E)
R614	1-216-039-00	METAL CHIP	390	5%	1/10W (CND,US,AR,AUS,EA,KR,MX,MY,SP,TH,TW)
R614	1-216-035-00	METAL CHIP	270	5%	1/10W (AED,AEP,CIS,G,UK)
R615	1-216-049-91	RES-CHIP	1K	5%	1/10W
R616	1-216-065-91	RES-CHIP	4.7K	5%	1/10W
R617	1-216-041-00	METAL CHIP	470	5%	1/10W (E)
R617	1-216-039-00	METAL CHIP	390	5%	1/10W (CND,US,AR,AUS,EA,KR,MX,MY,SP,TH,TW)
R617	1-216-035-00	METAL CHIP	270	5%	1/10W (AED,AEP,CIS,G,UK)
R618	1-216-049-91	RES-CHIP	1K	5%	1/10W
R619	1-216-025-91	RES-CHIP	100	5%	1/10W
R620	1-216-065-91	RES-CHIP	4.7K	5%	1/10W
R621	1-216-075-00	METAL CHIP	12K	5%	1/10W
R622	1-216-057-00	METAL CHIP	2.2K	5%	1/10W
R623	1-216-073-00	METAL CHIP	10K	5%	1/10W
R624	1-216-073-00	METAL CHIP	10K	5%	1/10W
R625	1-216-073-00	METAL CHIP	10K	5%	1/10W
R641	1-216-097-91	RES-CHIP	100K	5%	1/10W
R642	1-216-073-00	METAL CHIP	10K	5%	1/10W
R655	1-216-073-00	METAL CHIP	10K	5%	1/10W
R656	1-216-222-00	RES-CHIP	10K	5%	1/8W
R658	1-216-174-00	RES-CHIP	100	5%	1/8W
R659	1-216-061-00	METAL CHIP	3.3K	5%	1/10W
R660	1-216-065-91	RES-CHIP	4.7K	5%	1/10W
R661	1-216-025-91	RES-CHIP	100	5%	1/10W
R662	1-216-065-91	RES-CHIP	4.7K	5%	1/10W
R663	1-216-065-91	RES-CHIP	4.7K	5%	1/10W
R664	1-216-065-91	RES-CHIP	4.7K	5%	1/10W
R665	1-216-025-91	RES-CHIP	100	5%	1/10W
R666	1-216-073-00	METAL CHIP	10K	5%	1/10W
R667	1-216-222-00	RES-CHIP	10K	5%	1/8W
R668	1-216-049-91	RES-CHIP	1K	5%	1/10W
R669	1-216-065-91	RES-CHIP	4.7K	5%	1/10W
R681	1-216-025-91	RES-CHIP	100	5%	1/10W (AED,AEP,CIS,G,UK)
R682	1-216-073-00	METAL CHIP	10K	5%	1/10W (AED,AEP,CIS,G,UK)

Ref. No.	Part No.	Description				Remarks
R683	1-216-097-91	RES-CHIP	100K	5%	1/10W	(AED,AEP,CIS,G,UK)
R684	1-216-097-91	RES-CHIP	100K	5%	1/10W	(AED,AEP,CIS,G,UK)
R685	1-216-067-00	METAL CHIP	5.6K	5%	1/10W	(AED,AEP,CIS,G,UK)
R686	1-216-166-00	RES-CHIP	47	5%	1/8W	(AED,AEP,CIS,G,UK)
R688	1-216-065-91	RES-CHIP	4.7K	5%	1/10W	(AED,AEP,CIS,G,UK)
R689	1-216-065-91	RES-CHIP	4.7K	5%	1/10W	(AED,AEP,CIS,G,UK)
R801	1-260-304-51	CARBON	10	5%	1/2W	(AED,AEP,CIS,G,UK)
R802	1-260-304-51	CARBON	10	5%	1/2W	(AED,AEP,CIS,G,UK)
R804	1-216-089-91	RES-CHIP	47K	5%	1/10W	(AR,AUS,E,EA,KR,MX,MY,SP,TH,TW)
R821	1-216-089-91	RES-CHIP	47K	5%	1/10W	
R822	1-216-091-00	METAL CHIP	56K	5%	1/10W	
R823	1-216-073-00	METAL CHIP	10K	5%	1/10W	
R824	1-216-073-00	METAL CHIP	10K	5%	1/10W	
R825	1-216-065-91	RES-CHIP	4.7K	5%	1/10W	
R826	1-216-085-00	METAL CHIP	33K	5%	1/10W	
R827	1-216-081-00	METAL CHIP	22K	5%	1/10W	
R829	1-216-081-00	METAL CHIP	22K	5%	1/10W	
R831	1-216-067-00	METAL CHIP	5.6K	5%	1/10W	
R841	1-216-081-00	METAL CHIP	22K	5%	1/10W	
R842	1-216-081-00	METAL CHIP	22K	5%	1/10W	
R843	1-216-065-91	RES-CHIP	4.7K	5%	1/10W	
R844	1-216-097-91	RES-CHIP	100K	5%	1/10W	
R845	1-216-121-91	RES-CHIP	1M	5%	1/10W	
R851	1-260-304-51	CARBON	10	5%	1/2W	(AED,AEP,CIS,G,UK)
R852	1-260-304-51	CARBON	10	5%	1/2W	(AED,AEP,CIS,G,UK)
R854	1-216-089-91	RES-CHIP	47K	5%	1/10W	(AR,AUS,E,EA,KR,MX,MY,SP,TH,TW)
R861	1-216-049-91	RES-CHIP	1K	5%	1/10W	
R862	1-216-073-00	METAL CHIP	10K	5%	1/10W	
R863	1-216-089-91	RES-CHIP	47K	5%	1/10W	
R864	1-216-049-91	RES-CHIP	1K	5%	1/10W	
R865	1-216-049-91	RES-CHIP	1K	5%	1/10W	
R866	1-216-019-00	METAL CHIP	56	5%	1/10W	
R868	1-215-891-11	METAL OXIDE	680	5%	2W	
R869	1-215-891-11	METAL OXIDE	680	5%	2W	
R891	1-216-296-91	SHORT	0 (TH)			
R891	1-216-222-00	RES-CHIP	10K	5%	1/8W	(AR,AUS,E,EA,KR,MX,MY,SP,TW)
R892	1-216-065-91	RES-CHIP	4.7K	5%	1/10W	(AR,AUS,E,EA,KR,MX,MY,SP,TH,TW)
R893	1-216-057-00	METAL CHIP	2.2K	5%	1/10W	(AR,AUS,E,EA,KR,MX,MY,SP,TH,TW)
R912	1-216-222-00	RES-CHIP	10K	5%	1/8W	
⚠R916	1-219-120-51	FUSIBLE	0.15	5%	1/4W	
R923	1-216-295-91	SHORT	0 (TH)			
R924	1-216-295-91	SHORT	0 (TH)			
R928	1-216-295-91	SHORT	0 (TH)			
R966	1-216-019-00	METAL CHIP	56	5%	1/10W	

Ref. No.	Part No.	Description	Remarks
		< COMPOSITION CIRCUIT BLOCK >	
RB641	1-234-457-11	ENCAPSULATED COMPONENT	
		< VARIABLE RESISTOR >	
RV301	1-241-764-11	RES, ADJ, CARBON 10K	
RV302	1-241-762-11	RES, ADJ, CARBON 2.2K	
RV303	1-241-762-11	RES, ADJ, CARBON 2.2K	
RV304	1-241-768-11	RES, ADJ, CARBON 220K	
RV351	1-241-764-11	RES, ADJ, CARBON 10K	
RV352	1-241-762-11	RES, ADJ, CARBON 2.2K	
RV353	1-241-762-11	RES, ADJ, CARBON 2.2K	
RV354	1-241-768-11	RES, ADJ, CARBON 220K	
RV611	1-238-601-11	RES, ADJ, CARBON 22K	
		< RELAY >	
RY801	1-755-373-11	RELAY (EXCEPT MY,SP,TW)	
		< TRANSFORMER >	
T301	1-423-980-11	TRANSFORMER, BIAS OSCILLATION	
T601	1-435-195-11	TRANSFORMER, DISCRIMINATOR	
T602	1-234-477-11	ENCAPSULATED COMPONENT	(AED,AEP,CIS,G,UK)
		< TERMINAL >	
TM601	1-694-555-11	TERMINAL BOARD (4P) (FM/AM)	(CND,US,AR,AUS,E,EA,KR,MX,MY,SP,TH,TW)
TM601	1-694-556-21	TERMINAL BOARD (ANT.PAL) (FM/AM)	(AED,AEP,CIS,G,UK)
TM801	1-694-635-11	TERMINAL BOARD (4P) (SPEAKER)	
		< VIBRATOR >	
X401	1-567-098-41	VIBRATOR, CRYSTAL 32.768KHz	
X402	1-781-107-21	VIBRATOR, SERAMIC 16MHz	
X651	1-760-549-31	VIBRATOR, CRYSTAL 4.5MHz	
		< VIBRATOR >	
XT681	1-579-900-21	VIBRATOR, CRYSTAL (AED,AEP,CIS,G,UK)	
**********			
	1-675-910-11	MOTOR BOARD	
		**********	
		< CAPACITOR >	
C721	1-162-306-11	CERAMIC 0.01uF 30.00% 16V	
		< CONNECTOR >	
CN721	1-770-516-31	CONNECTOR, FFC 8P	
CN722	1-785-330-11	PIN, CONNECTOR (LIGHT ANGLE)4P	
		< SWITCH >	
S701	1-771-822-11	SWITCH, LEVER (SLIDE)	
**********			

The components identified by mark ⚠ or dotted line with mark ⚠ are critical for safety. Replace only with part number specified.	Les composants identifiés par une marque ⚠ sont critiques pour la sécurité. Ne les remplacer que par une pièce portant le numéro spécifié.

PANEL

Ref. No.	Part No.	Description	Remarks
	A-4428-075-A	PANEL BOARD, COMPLETE (AED,AEP,CIS,CND,G,UK,US)	
		**********	
	A-4428-092-A	PANEL BOARD, COMPLETE (AR,AUS,E,KR,MX,MY,SP,TW)	
		**********	
	A-4428-286-A	PANEL BOARD, COMPLETE (EA)	
		**********	
	A-4428-907-A	PANEL BOARD, COMPLETE (TH)	
		**********	
	4-224-584-01	HOLDER(FL)	
		< CAPACITOR >	
C601	1-124-589-11	ELECT 47uF 20% 16V	
C602	1-126-163-11	ELECT 4.7uF 20% 50V	
C603	1-162-306-11	CERAMIC 0.01uF 30.00% 16V	
C604	1-162-294-31	CERAMIC 0.001uF 10% 50V	
C605	1-162-306-11	CERAMIC 0.01uF 30.00% 16V	
C606	1-162-294-31	CERAMIC 0.001uF 10% 50V	
C607	1-104-664-11	ELECT 47uF 20.00% 10V	
C608	1-162-306-11	CERAMIC 0.01uF 30.00% 16V	
C609	1-162-306-11	CERAMIC 0.01uF 30.00% 16V	
C610	1-126-157-11	ELECT 10uF 20% 16V	
C611	1-126-157-11	ELECT 10uF 20% 16V	
C612	1-162-303-11	CERAMIC 0.0033uF 30.00% 16V	
C613	1-126-157-11	ELECT 10uF 20% 16V	
C614	1-126-157-11	ELECT 10uF 20% 16V	
C615	1-126-963-11	ELECT 4.7uF 20.00% 50V	
C616	1-162-306-11	CERAMIC 0.01uF 30.00% 16V	
C620	1-126-933-11	ELECT 100uF 20.00% 16V	
C621	1-104-664-11	ELECT 47uF 20.00% 16V	
C631	1-162-294-31	CERAMIC 0.001uF 10% 50V	
C632	1-162-294-31	CERAMIC 0.001uF 10% 50V	
C633	1-164-159-21	CERAMIC 0.1uF 50V	(TH)
C651	1-164-159-11	CERAMIC 0.1uF 50V	
C652	1-126-960-11	ELECT 1uF 20.00% 50V	
C653	1-126-960-11	ELECT 1uF 20.00% 50V	
C654	1-164-159-11	CERAMIC 0.1uF 50V	
C655	1-162-282-31	CERAMIC 100PF 10% 50V	
C656	1-162-282-31	CERAMIC 100PF 10% 50V	
C657	1-162-282-31	CERAMIC 100PF 10% 50V	
C658	1-162-282-31	CERAMIC 100PF 10% 50V	
C659	1-162-282-31	CERAMIC 100PF 10% 50V	
C660	1-162-282-31	CERAMIC 100PF 10% 50V	
C661	1-162-282-31	CERAMIC 100PF 10% 50V	
C662	1-162-282-31	CERAMIC 100PF 10% 50V	
C663	1-162-282-31	CERAMIC 100PF 10% 50V	
C664	1-162-282-31	CERAMIC 100PF 10% 50V	
C665	1-162-282-31	CERAMIC 100PF 10% 50V	
C666	1-162-282-31	CERAMIC 100PF 10% 50V	
C667	1-162-282-31	CERAMIC 100PF 10% 50V	
C668	1-162-282-31	CERAMIC 100PF 10% 50V	
C669	1-162-282-31	CERAMIC 100PF 10% 50V	

Ref. No.	Part No.	Description	Remarks
C670	1-162-282-31	CERAMIC 100PF 10% 50V	
C671	1-162-282-31	CERAMIC 100PF 10% 50V	
C717	1-126-157-11	ELECT 10uF 20% 16V	(AR,AUS,E,EA,KR,MX,MY,SP,TH,TW)
C718	1-126-157-11	ELECT 10uF 20% 16V	(AR,AUS,E,EA,KR,MX,MY,SP,TH,TW)
C719	1-126-961-11	ELECT 2.2uF 20.00% 50V	(AR,AUS,E,EA,KR,MX,MY,SP,TH,TW)
C720	1-164-159-11	CERAMIC 0.1uF 50V (EA)	
C721	1-162-294-31	CERAMIC 0.001uF 10% 50V (EA)	
C722	1-162-305-11	CERAMIC 0.0068uF 30.00% 16V (EA)	
C723	1-126-960-11	ELECT 1uF 20.00% 50V (EA)	
C724	1-136-495-11	MYLAR 0.068uF 5.00% 50V (EA)	
C725	1-126-959-11	ELECT 0.47uF 20.00% 50V (EA)	
C726	1-124-465-00	ELECT 0.47uF 20% 50V (EA)	
C727	1-136-167-00	MYLAR 0.15uF 5.00% 50V (EA)	
C728	1-162-294-31	CERAMIC 0.001uF 10% 50V (EA)	
C729	1-126-960-11	ELECT 1uF 20.00% 50V (EA)	
C730	1-161-494-00	CERAMIC 0.022uF 25V (EA)	
C731	1-162-305-11	CERAMIC 0.0068uF 30.00% 16V (EA)	
C732	1-136-495-11	MYLAR 0.068uF 5.00% 50V (EA)	
C733	1-104-664-11	ELECT 47uF 20.00% 10V (EA)	
C734	1-124-589-11	ELECT 47uF 20% 16V (EA)	
C735	1-124-257-00	ELECT 2.2uF 20% 50V (EA)	
C736	1-126-964-11	ELECT 10uF 20.00% 50V	(AR,AUS,E,EA,KR,MX,MY,SP,TH,TW)
C737	1-126-964-11	ELECT 10uF 20.00% 50V	(AR,AUS,E,EA,KR,MX,MY,SP,TH,TW)
C738	1-126-961-11	ELECT 2.2uF 20.00% 50V	(AR,AUS,E,EA,KR,MX,MY,SP,TH,TW)
C739	1-162-215-31	CERAMIC 47PF 5% 50V	(AR,AUS,E,EA,KR,MX,MY,SP,TH,TW)
C740	1-162-282-31	CERAMIC 100PF 10% 50V	(AR,AUS,E,EA,KR,MX,MY,SP,TH,TW)
C741	1-124-463-00	ELECT 0.1uF 20% 50V	(AR,AUS,E,EA,KR,MX,MY,SP,TH,TW)
C742	1-162-215-31	CERAMIC 47PF 5% 50V	(AR,AUS,E,EA,KR,MX,MY,SP,TH,TW)
C743	1-162-290-31	CERAMIC 470PF 10% 50V	(AR,AUS,E,EA,KR,MX,MY,SP,TH,TW)
C744	1-162-294-31	CERAMIC 0.001uF 10% 50V	(AR,AUS,E,EA,KR,MX,MY,SP,TH,TW)
C745	1-126-961-11	ELECT 2.2uF 20.00% 50V	(AR,AUS,E,EA,KR,MX,MY,SP,TH,TW)
C746	1-162-306-11	CERAMIC 0.01uF 30.00% 16V	(AR,AUS,E,EA,KR,MX,MY,SP,TH,TW)
C747	1-126-961-11	ELECT 2.2uF 20.00% 50V (EA)	
C748	1-162-306-11	CERAMIC 0.01uF 30.00% 16V (EA)	
C749	1-162-306-11	CERAMIC 0.01uF 30.00% 16V	(AR,AUS,E,EA,KR,MX,MY,SP,TW)
C750	1-162-282-31	CERAMIC 100PF 10% 50V	
C751	1-162-282-31	CERAMIC 100PF 10% 50V	
C752	1-162-282-31	CERAMIC 100PF 10% 50V	
C753	1-162-282-31	CERAMIC 100PF 10% 50V	
C754	1-162-282-31	CERAMIC 100PF 10% 50V	
C755	1-162-282-31	CERAMIC 100PF 10% 50V	
C756	1-162-282-31	CERAMIC 100PF 10% 50V	
C757	1-162-282-31	CERAMIC 100PF 10% 50V	
C758	1-162-282-31	CERAMIC 100PF 10% 50V	
C759	1-162-282-31	CERAMIC 100PF 10% 50V	

Ref. No.	Part No.	Description				Remarks
C760	1-162-282-31	CERAMIC	100PF	10%	50V	
C761	1-162-282-31	CERAMIC	100PF	10%	50V	
C762	1-162-282-31	CERAMIC	100PF	10%	50V	
C763	1-162-282-31	CERAMIC	100PF	10%	50V	
C764	1-162-282-31	CERAMIC	100PF	10%	50V	
C765	1-162-282-31	CERAMIC	100PF	10%	50V	
C766	1-162-282-31	CERAMIC	100PF	10%	50V	
C767	1-162-282-31	CERAMIC	100PF	10%	50V	
C768	1-162-282-31	CERAMIC	100PF	10%	50V	
C769	1-162-282-31	CERAMIC	100PF	10%	50V	
C770	1-162-282-31	CERAMIC	100PF	10%	50V	
C771	1-162-282-31	CERAMIC	100PF	10%	50V	
C772	1-162-282-31	CERAMIC	100PF	10%	50V	
C773	1-162-282-31	CERAMIC	100PF	10%	50V	
C774	1-162-282-31	CERAMIC	100PF	10%	50V	
C775	1-162-282-31	CERAMIC	100PF	10%	50V	
C776	1-162-282-31	CERAMIC	100PF	10%	50V	
C777	1-162-282-31	CERAMIC	100PF	10%	50V	
C778	1-162-282-31	CERAMIC	100PF	10%	50V	
C779	1-162-282-31	CERAMIC	100PF	10%	50V	
C780	1-162-282-31	CERAMIC	100PF	10%	50V	
C781	1-162-282-31	CERAMIC	100PF	10%	50V	
C782	1-162-282-31	CERAMIC	100PF	10%	50V	
C783	1-162-282-31	CERAMIC	100PF	10%	50V	
C784	1-162-282-31	CERAMIC	100PF	10%	50V	
		< CONNECTOR >				
CN601	1-793-767-11	CONNECTOR, BOARD TO BOARD 30P				
		< DIODE >				
D601	8-719-057-30	DIODE	HLMF-K205-2UL			
D602	8-719-063-93	DIODE	SLR325VC-N-T32			
D603	8-719-921-48	DIODE	MTZJ-T-72-5.6C			
D611	8-719-071-41	DIODE	SELS5923C-TP15 (GROOVE)			
D612	8-719-071-41	DIODE	SELS5923C-TP15 (CURSOL)			
D613	8-719-071-41	DIODE	SELS5923C-TP15 (CURSOL)			
D614	8-719-071-41	DIODE	SELS5923C-TP15 (V-GROOVE)			
D615	8-719-072-82	DIODE	SELU5E20C-STP15 (FUNCTION)			
D617	8-719-063-93	DIODE	SLR325VC-N-T32 (REC/PAUSE)			
D618	8-719-071-41	DIODE	SELS5923C-TP15 (SURROUND)			
		< FERRITE BEAD >				
FB601	1-412-473-21	INDUCTOR	0UH			
FB602	1-412-473-21	INDUCTOR	0UH			
FB603	1-412-473-21	INDUCTOR	0UH (EXCEPT TH)			
		< FILTER >				
FL601	1-517-928-11	INDICATOR TUBE, FLUORESCENT				
		< IC >				
IC601	8-759-652-49	IC	TMP88CP77F-1A22			
IC602	8-759-083-77	IC	BA3830F			
IC603	8-759-648-23	IC	RPM6940-H4 (SIRCS)			
IC721	8-759-496-40	IC	M65850FP (EA)			
IC722	8-759-634-51	IC	M5218AP (AR,AUS,E,EA,KR,MX,MY,SP,TH,TW)			

Ref. No.	Part No.	Description				Remarks
		< JACK >				
J631	1-785-569-11	JACK (SMALL TYPE)(PHONE)				
J721	1-785-569-11	JACK (SMALL TYPE)(MIC 1) (AR,AUS,E,EA,KR,MX,MY,SP,TH,TW)				
J722	1-785-569-11	JACK (SMALL TYPE)(MIC 2) (EA)				
		< COIL >				
L601	1-410-509-11	INDUCTOR	10uH			
		< TRANSISTOR >				
Q604	8-729-900-80	TRANSISTOR	BA1A4M-TP			
Q605	8-729-900-80	TRANSISTOR	BA1A4M-TP			
Q606	8-729-900-74	TRANSISTOR	BA1L3Z-TP			
Q607	8-729-900-74	TRANSISTOR	BA1L3Z-TP			
Q608	8-729-900-74	TRANSISTOR	BA1L3Z-TP			
Q609	8-729-900-74	TRANSISTOR	BA1L3Z-TP			
Q610	8-729-900-74	TRANSISTOR	BA1L3Z-TP			
Q611	8-729-900-74	TRANSISTOR	BA1L3Z-TP			
Q612	8-729-900-74	TRANSISTOR	BA1L3Z-TP			
Q613	8-729-900-74	TRANSISTOR	BA1L3Z-TP			
Q614	8-729-900-74	TRANSISTOR	BA1L3Z-TP			
Q615	8-729-111-29	TRANSISTOR	2SD1616A-TP-LK			
Q621	8-729-900-80	TRANSISTOR	BA1A4M-TP			
Q622	8-729-900-80	TRANSISTOR	BA1A4M-TP			
Q623	8-729-900-80	TRANSISTOR	BA1A4M-TP			
Q624	8-729-900-80	TRANSISTOR	BA1A4M-TP			
Q625	8-729-900-80	TRANSISTOR	BA1A4M-TP			
Q626	8-729-900-80	TRANSISTOR	BA1A4M-TP			
Q721	8-729-119-79	TRANSISTOR	2SC2785TP-FEK (AR,AUS,E,EA,KR,MX,MY,SP,TH,TW)			
		< RESISTOR >				
R603	1-249-429-11	CARBON	10K	5%	1/4W	
R604	1-247-807-31	CARBON	100	5%	1/4W	
R605	1-247-903-00	CARBON	1M	5%	1/4W	
R606	1-247-807-31	CARBON	100	5%	1/4W	
R607	1-249-429-11	CARBON	10K	5%	1/4W	
R608	1-247-807-31	CARBON	100	5%	1/4W	
R609	1-249-429-11	CARBON	10K	5%	1/4W	
R610	1-247-807-31	CARBON	100	5%	1/4W	
R611	1-249-429-11	CARBON	10K	5%	1/4W	
R612	1-249-401-11	CARBON	47	5%	1/4W	F
R613	1-247-893-11	CARBON	390K	5%	1/4W	
R614	1-247-893-11	CARBON	390K	5%	1/4W	
R615	1-249-441-11	CARBON	100K	5%	1/4W	
R616	1-249-440-11	CARBON	82K	5%	1/4W	
R617	1-249-429-11	CARBON	10K	5%	1/4W	
R618	1-249-441-11	CARBON	100K	5%	1/4W	
R619	1-249-441-11	CARBON	100K	5%	1/4W	
R620	1-249-437-11	CARBON	47K	5%	1/4W	
R621	1-249-440-11	CARBON	82K	5%	1/4W	
R622	1-249-429-11	CARBON	10K	5%	1/4W	
R623	1-249-431-11	CARBON	15K	5%	1/4W	
R625	1-249-435-11	CARBON	33K	5%	1/4W	
R626	1-247-895-00	CARBON	470K	5%	1/4W	
R633	1-249-411-11	CARBON	330	5%	1/4W	
R634	1-249-407-11	CARBON	150	5%	1/4W	F

PANEL

Ref. No.	Part No.	Description			Remarks
R635	1-249-401-11	CARBON	47	5%	1/4W F
R636	1-249-441-11	CARBON	100K	5%	1/4W
R637	1-249-441-11	CARBON	100K	5%	1/4W
R638	1-249-441-11	CARBON	100K	5%	1/4W
R639	1-249-441-11	CARBON	100K	5%	1/4W
R640	1-249-441-11	CARBON	100K	5%	1/4W
R641	1-249-441-11	CARBON	100K	5%	1/4W
R642	1-249-441-11	CARBON	100K	5%	1/4W
R643	1-249-441-11	CARBON	100K	5%	1/4W
R644	1-249-441-11	CARBON	100K	5%	1/4W
R651	1-249-429-11	CARBON	10K	5%	1/4W
R652	1-249-410-11	CARBON	270	5%	1/4W F
R653	1-249-411-11	CARBON	330	5%	1/4W
R654	1-249-413-11	CARBON	470	5%	1/4W F
R655	1-249-415-11	CARBON	680	5%	1/4W F
R656	1-249-417-11	CARBON	1K	5%	1/4W F
R657	1-249-418-11	CARBON	1.2K	5%	1/4W F
R658	1-249-418-11	CARBON	1.2K	5%	1/4W F
R659	1-249-417-11	CARBON	1K	5%	1/4W F
R660	1-249-420-11	CARBON	1.8K	5%	1/4W F
R661	1-247-843-11	CARBON	3.3K	5%	1/4W
R662	1-249-425-11	CARBON	4.7K	5%	1/4W F
R664	1-249-429-11	CARBON	10K	5%	1/4W
R665	1-249-410-11	CARBON	270	5%	1/4W F
R666	1-249-411-11	CARBON	330	5%	1/4W
R667	1-249-413-11	CARBON	470	5%	1/4W F
R668	1-249-414-11	CARBON	560	5%	1/4W F
R669	1-249-414-11	CARBON	560	5%	1/4W F
R670	1-249-415-11	CARBON	680	5%	1/4W F
R671	1-249-422-11	CARBON	2.7K	5%	1/4W F
R672	1-249-420-11	CARBON	1.8K	5%	1/4W F
R673	1-249-422-11	CARBON	2.7K	5%	1/4W F
R674	1-247-843-11	CARBON	3.3K	5%	1/4W
R675	1-249-425-11	CARBON	4.7K	5%	1/4W F
R676	1-249-427-11	CARBON	6.8K	5%	1/4W F
R677	1-249-429-11	CARBON	10K	5%	1/4W
R678	1-249-432-11	CARBON	18K	5%	1/4W
R679	1-249-429-11	CARBON	10K	5%	1/4W
R680	1-249-410-11	CARBON	270	5%	1/4W F
R681	1-249-411-11	CARBON	330	5%	1/4W
R682	1-249-413-11	CARBON	470	5%	1/4W F
R683	1-249-414-11	CARBON	560	5%	1/4W F
R684	1-249-415-11	CARBON	680	5%	1/4W F
R693	1-249-429-11	CARBON	10K	5%	1/4W
R694	1-249-429-11	CARBON	10K	5%	1/4W
R695	1-249-429-11	CARBON	10K	5%	1/4W
R696	1-249-429-11	CARBON	10K	5%	1/4W
R701	1-249-409-11	CARBON	220	5%	1/4W F
R702	1-249-407-11	CARBON	150	5%	1/4W F
R703	1-249-409-11	CARBON	220	5%	1/4W F
R704	1-249-411-11	CARBON	330	5%	1/4W
R705	1-249-410-11	CARBON	270	5%	1/4W F
R706	1-249-409-11	CARBON	220	5%	1/4W F
R721	1-260-099-11	CARBON	1K	5%	1/2W
			(AR,AUS,E,EA,KR,MX,MY,SP,TH,TW)		
R722	1-260-100-11	CARBON	1.2K	5%	1/2W
			(AR,AUS,E,EA,KR,MX,MY,SP,TH,TW)		

Ref. No.	Part No.	Description			Remarks
R723	1-249-433-11	CARBON	22K	5%	1/4W (EA)
R724	1-249-433-11	CARBON	22K	5%	1/4W (EA)
R725	1-249-433-11	CARBON	22K	5%	1/4W (EA)
R726	1-249-437-11	CARBON	47K	5%	1/4W (EA)
R727	1-249-433-11	CARBON	22K	5%	1/4W (EA)
R728	1-249-429-11	CARBON	10K	5%	1/4W (EA)
R729	1-249-433-11	CARBON	22K	5%	1/4W (EA)
R730	1-249-433-11	CARBON	22K	5%	1/4W (EA)
R731	1-247-881-00	CARBON	120K	5%	1/4W (EA)
R733	1-249-429-11	CARBON	10K	5%	1/4W (EA)
R734	1-247-807-31	CARBON	100	5%	1/4W (AR,AUS,E,EA,KR,MX,MY,SP,TH,TW)
R735	1-247-885-00	CARBON	180K	5%	1/4W (AR,AUS,E,EA,KR,MX,MY,SP,TH,TW)
R736	1-249-429-11	CARBON	10K	5%	1/4W (AR,AUS,E,EA,KR,MX,MY,SP,TH,TW)
R737	1-249-437-11	CARBON	47K	5%	1/4W (EA)
R737	1-249-433-11	CARBON	22K	5%	1/4W (AR,AUS,E,KR,MX,MY,SP,TH,TW)
R738	1-249-417-11	CARBON	1K	5%	1/4W F (AR,AUS,E,EA,KR,MX,MY,SP,TH,TW)
R739	1-249-441-11	CARBON	100K	5%	1/4W (AR,AUS,E,EA,KR,MX,MY,SP,TH,TW)
R740	1-249-417-11	CARBON	1K	5%	1/4W F (AR,AUS,E,EA,KR,MX,MY,SP,TH,TW)
R741	1-249-429-11	CARBON	10K	5%	1/4W (AR,AUS,E,EA,KR,MX,MY,SP,TH,TW)
R742	1-249-417-11	CARBON	1K	5%	1/4W F (EA)
R744	1-249-441-11	CARBON	100K	5%	1/4W (AR,AUS,E,EA,KR,MX,MY,SP,TH,TW)
R745	1-247-807-31	CARBON	100	5%	1/4W (AR,AUS,E,EA,KR,MX,MY,SP,TH,TW)
		< VARIABLE RESISTOR >			
RV721	1-225-739-11	RES, VAR CARBON 50K (ECHO) (EA)			
RV722	1-225-739-11	RES, VAR CARBON 50K (MIC) (AR,AUS,E,EA,KR,MX,MY,SP,TH,TW)			
		< SWITCH >			
S601	1-418-725-11	ENCODER, ROTARY (12 TYPE) (VOLUME)			
S611	1-762-875-21	SWITCH, KEYBOARD (UP)			
S612	1-762-875-21	SWITCH, KEYBOARD (DOWN)			
S613	1-762-875-21	SWITCH, KEYBOARD (V-GROOVE)			
S614	1-762-875-21	SWITCH, KEYBOARD (LOOP)			
S615	1-762-875-21	SWITCH, KEYBOARD (CD SYNC)			
S616	1-762-875-21	SWITCH, KEYBOARD (REC/PAUSE)			
S617	1-762-875-21	SWITCH, KEYBOARD (ENTER/NEXT)			
S618	1-762-875-21	SWITCH, KEYBOARD (FF)			
S619	1-762-875-21	SWITCH, KEYBOARD (AMS+)			

Ref. No.	Part No.	Description	Remarks
S620	1-762-875-21	SWITCH, KEYBOARD (PAUSE)	
S621	1-762-875-21	SWITCH, KEYBOARD (-AMS)	
S623	1-762-875-21	SWITCH, KEYBOARD (LEFT)	
S624	1-762-875-21	SWITCH, KEYBOARD (RIGHT)	
S625	1-762-875-21	SWITCH, KEYBOARD (TAPE A/B)	
S626	1-762-875-21	SWITCH, KEYBOARD (STOP)	
S627	1-762-875-21	SWITCH, KEYBOARD (CD)	
S628	1-762-875-21	SWITCH, KEYBOARD (TUNER/BAND)	
S629	1-762-875-21	SWITCH, KEYBOARD (PLAY)	
S630	1-762-875-21	SWITCH, KEYBOARD (MD(VIDEO))	
S631	1-762-875-21	SWITCH, KEYBOARD (REV)	
S632	1-762-875-21	SWITCH, KEYBOARD (SURROUND)	
S633	1-762-875-21	SWITCH, KEYBOARD (DIRECTION)	
S634	1-762-875-21	SWITCH, KEYBOARD (REPEAT)	
S635	1-762-875-21	SWITCH, KEYBOARD (PLAY MODE)	
S636	1-762-875-21	SWITCH, KEYBOARD (EDIT)	
S637	1-762-875-21	SWITCH, KEYBOARD (POWER)	
S638	1-762-875-21	SWITCH, KEYBOARD (GROOVE)	
S639	1-762-875-21	SWITCH, KEYBOARD (EQ EDIT)	
S640	1-762-875-21	SWITCH, KEYBOARD (SPECTRUM)	
S641	1-762-875-21	SWITCH, KEYBOARD (DISPLAY)	
		< VIBRATOR >	
X601	1-579-352-11	VIBRATOR, CERAMIC 12.5MHz	
**********			
	A-4428-077-A	CD SWITCH BOARD, COMPLETE	
		**********	
		< DIODE >	
D630	8-719-056-13	DIODE SML79423C-TP15	
D631	8-719-056-13	DIODE SML79423C-TP15	
D632	8-719-056-13	DIODE SML79423C-TP15	
		< TRANSISTOR >	
Q630	8-729-422-57	TRANSISTOR BN1A4M-TP	
Q631	8-729-422-57	TRANSISTOR BN1A4M-TP	
Q632	8-729-422-57	TRANSISTOR BN1A4M-TP	
Q633	8-729-422-57	TRANSISTOR BN1A4M-TP	
Q634	8-729-422-57	TRANSISTOR BN1A4M-TP	
Q635	8-729-422-57	TRANSISTOR BN1A4M-TP	
		< RESISTOR >	
R685	1-249-417-11	CARBON 1K 5% 1/4W F	
R686	1-249-418-11	CARBON 1.2K 5% 1/4W F	
R687	1-249-420-11	CARBON 1.8K 5% 1/4W F	
R688	1-249-422-11	CARBON 2.7K 5% 1/4W F	
R689	1-247-843-11	CARBON 3.3K 5% 1/4W	
R750	1-249-406-11	CARBON 120 5% 1/4W F	
R751	1-249-406-11	CARBON 120 5% 1/4W F	
R752	1-249-406-11	CARBON 120 5% 1/4W F	
R753	1-249-406-11	CARBON 120 5% 1/4W F	
R754	1-249-406-11	CARBON 120 5% 1/4W F	
R755	1-249-406-11	CARBON 120 5% 1/4W F	

Ref. No.	Part No.	Description	Remarks
		< SWITCH >	
S642	1-762-875-21	SWITCH, KEYBOARD (DISC SKIP)	
S643	1-762-875-21	SWITCH, KEYBOARD (DISC 1)	
S644	1-762-875-21	SWITCH, KEYBOARD (DISC 2)	
S645	1-762-875-21	SWITCH, KEYBOARD (DISC 3)	
S646	1-762-875-21	SWITCH, KEYBOARD (CD OPEN/CLOSE)	
**********			
	A-4428-079-A	POWER AMP BOARD, COMPLETE	
		(AED,AEP,CIS,G,UK,US)	
		**********	
	A-4428-094-A	POWER AMP BOARD, COMPLETE	
		(AR,AUS,E,EA,KR,MX,MY,SP,TW)	
		**********	
	A-4428-336-A	POWER AMP BOARD, COMPLETE (CND)	
		**********	
	A-4428-901-A	POWER AMP BOARD, COMPLETE (TH)	
		**********	
	1-533-293-31	FUSE HOLDER	
		< CAPACITOR >	
C501	1-126-963-11	ELECT 4.7uF 20.00% 50V	
C502	1-162-294-31	CERAMIC 0.001uF 10% 50V	
C503	1-162-286-31	CERAMIC 220PF 10% 50V	
C504	1-104-665-11	ELECT 100uF 20.00% 10V	
C507	1-136-495-11	MYLAR 0.068uF 5.00% 50V	
C508	1-136-495-11	MYLAR 0.068uF 5.00% 50V	
C509	1-128-560-11	ELECT 22uF 20.00% 100V	
C510	1-128-578-11	ELECT 1uF 20.00% 100V	
C511	1-162-306-11	CERAMIC 0.01uF 30.00% 16V	
C512	1-162-306-11	CERAMIC 0.01uF 30.00% 16V	
C541	1-136-165-00	MYLAR 0.1uF 5.00% 50V	
C542	1-127-753-11	ELECT 3300uF 20% 71V	
		(AR,AUS,E,EA,KR,MX,MY,SP,TH,TW)	
C542	1-126-974-11	ELECT 3300uF 20.00% 50V	
		(CND)	
C542	1-127-752-11	ELECT 3300uF 20% 63V	
		(AED,AEP,CIS,G,UK,US)	
C551	1-126-963-11	ELECT 4.7uF 20.00% 50V	
C552	1-162-294-31	CERAMIC 0.001uF 10% 50V	
C553	1-162-286-31	CERAMIC 220PF 10% 50V	
C554	1-104-665-11	ELECT 100uF 20.00% 10V	
C557	1-136-495-11	MYLAR 0.068uF 5.00% 50V	
C558	1-136-495-11	MYLAR 0.068uF 5.00% 50V	
C559	1-128-560-11	ELECT 22uF 20.00% 100V	
C581	1-126-967-11	ELECT 47uF 20.00% 50V	
C591	1-136-165-00	MYLAR 0.1uF 5.00% 50V	
C592	1-127-753-11	ELECT 3300uF 20% 71V	
		(AR,AUS,E,EA,KR,MX,MY,SP,TH,TW	
C592	1-126-974-11	ELECT 3300uF 20.00% 50V	
		(CND)	
C592	1-127-752-11	ELECT 3300uF 20% 63V	
		(AED,AEP,CIS,G,UK,US)	
C942	1-126-964-11	ELECT 10uF 20.00% 50V	
C943	1-126-968-11	ELECT 100uF 20.00% 50V	
C980	1-164-159-11	CERAMIC 0.1uF 50V	
		< CONNECTOR >	
CN502	1-778-981-11	CONNECTOR, BOARD TO BOARD 13P	
CN503	1-778-981-11	CONNECTOR, BOARD TO BOARD 13P	

POWER AMP | SUB-TRANS

Ref. No.	Part No.	Description				Remarks
		< DIODE >				
D501	8-719-911-19	DIODE	1SS133T-72			
D502	8-719-911-19	DIODE	1SS133T-72			
D541	8-719-302-38	DIODE	RBV-602-01			
D551	8-719-911-19	DIODE	1SS133T-72			
D581	8-719-911-19	DIODE	1SS133T-72			
D941	8-719-983-99	DIODE	MTZJ-T-72-39D			
D979	8-719-110-31	DIODE	MTZJ-T-72-12B			
		< EARTH >				
* EP502	1-537-738-21	TERMINAL, EARTH				
		< IC >				
IC501	8-749-016-94	IC	STK402-090 (CND)			
IC501	8-749-016-96	IC	STK402-120 (EXCEPT CND)			
		< TRANSISTOR >				
Q501	8-729-140-84	TRANSISTOR	2SC1841TP-PAFAEA			
Q503	8-729-140-82	TRANSISTOR	2SA988TP-PAFAEA			
Q504	8-729-140-84	TRANSISTOR	2SC1841TP-PAFAEA			
Q505	8-729-140-84	TRANSISTOR	2SC1841TP-PAFAEA			
			(AR,AUS,E,EA,KR,MX,MY,SP,TH,TW)			
Q506	8-729-119-79	TRANSISTOR	2SC2785TP-FEK			
			(AR,AUS,E,EA,KR,MX,MY,SP,TH,TW)			
Q551	8-729-140-84	TRANSISTOR	2SC1841TP-PAFAEA			
Q581	8-729-140-84	TRANSISTOR	2SC1841TP-PAFAEA			
Q941	8-729-048-52	TRANSISTOR	2SA1932(TP)			
		< RESISTOR >				
R501	1-249-417-11	CARBON	1K	5%	1/4W	F
R502	1-249-438-11	CARBON	56K	5%	1/4W	
R503	1-249-414-11	CARBON	560	5%	1/4W	F
R504	1-249-438-11	CARBON	56K	5%	1/4W	
R505	1-249-417-11	CARBON	1K	5%	1/4W	F
R506	1-249-431-11	CARBON	15K	5%	1/4W	
R507	1-249-441-11	CARBON	100K	5%	1/4W	
⚠R508	1-217-156-00	METAL	0.22	20%	5W	
R509	1-260-076-11	CARBON	10	5%	1/2W	
⚠R510	1-217-156-00	METAL	0.22	20%	5W	
⚠R511	1-212-881-11	FUSIBLE	100	5%	1/4W	
⚠R512	1-202-972-61	FUSIBLE	1	5%	1/4W	
R513	1-249-435-11	CARBON	33K	5%	1/4W	
R514	1-249-421-11	CARBON	2.2K	5%	1/4W	F
R515	1-249-433-11	CARBON	22K	5%	1/4W	
R516	1-249-429-11	CARBON	10K	5%	1/4W	
R517	1-249-421-11	CARBON	2.2K	5%	1/4W	F
R518	1-249-435-11	CARBON	33K	5%	1/4W	
R519	1-249-439-11	CARBON	68K	5%	1/4W	
R521	1-249-441-11	CARBON	100K	5%	1/4W	
			(AR,AUS,E,EA,KR,MX,MY,SP,TH,TW)			
R522	1-249-441-11	CARBON	100K	5%	1/4W	
			(AR,AUS,E,EA,KR,MX,MY,SP,TH,TW)			
R523	1-249-441-11	CARBON	100K	5%	1/4W	
			(AR,AUS,E,EA,KR,MX,MY,SP,TH,TW)			
R541	1-249-437-11	CARBON	47K	5%	1/4W	
R551	1-249-417-11	CARBON	1K	5%	1/4W	F
R552	1-249-438-11	CARBON	56K	5%	1/4W	
R553	1-249-414-11	CARBON	560	5%	1/4W	F
R554	1-249-438-11	CARBON	56K	5%	1/4W	
R555	1-249-417-11	CARBON	1K	5%	1/4W	F
R556	1-249-431-11	CARBON	15K	5%	1/4W	
R557	1-249-441-11	CARBON	100K	5%	1/4W	
⚠R558	1-217-156-00	METAL	0.22	20%	5W	
R559	1-260-076-11	CARBON	10	5%	1/2W	
⚠R560	1-217-156-00	METAL	0.22	20%	5W	
⚠R561	1-212-881-11	FUSIBLE	100	5%	1/4W	
R581	1-249-435-11	CARBON	33K	5%	1/4W	
R582	1-249-435-11	CARBON	33K	5%	1/4W	
R591	1-249-437-11	CARBON	47K	5%	1/4W	
R942	1-249-429-11	CARBON	10K	5%	1/4W	
R943	1-249-417-11	CARBON	1K	5%	1/4W	F
R980	1-249-429-11	CARBON	10K	5%	1/4W	
		< THERMISTOR >				
TH501	1-807-796-11	THERMISTOR				
			(AR,AUS,E,EA,KR,MX,MY,SP,TH,TW)			
**********						
	A-4428-082-A	SUB TRANS BOARD, COMPLETE				
			(AED,AEP,CIS,G,UK)			
		**********				
	A-4428-959-A	SUB TRANS BOARD, COMPLETE (CND)				
		**********				
	A-4428-088-A	SUB TRANS BOARD, COMPLETE (US)				
		**********				
		< CAPACITOR >				
⚠C971	1-113-925-11	CERAMIC	0.01uF	20.00%	250V	
					(US)	
C973	1-126-933-11	ELECT	100uF	20.00%	16V	
C975	1-126-768-11	ELECT	2200uF	20.00%	16V	
C976	1-164-159-11	CERAMIC	0.1uF		50V	
C977	1-164-159-11	CERAMIC	0.1uF		50V	
C978	1-164-159-11	CERAMIC	0.1uF		50V	
		< CONNECTOR >				
CN974	1-564-321-00	PIN, CONNECTOR 2P				
CN976	1-506-468-11	PIN, CONNECTOR 3P				
		< DIODE >				
⚠D971	8-719-911-19	DIODE	1SS133T-72			
D972	8-719-024-99	DIODE	11ES2-NTA2B			
D973	8-719-024-99	DIODE	11ES2-NTA2B			
D974	8-719-024-99	DIODE	11ES2-NTA2B			
D975	8-719-024-99	DIODE	11ES2-NTA2B			
D976	8-719-911-19	DIODE	1SS133T-72			
		< IC >				
IC971	8-759-039-69	IC	uPC7805AHF			
		< TRANSISTOR >				
Q971	8-729-119-78	TRANSISTOR	2SC2785TP-HFE			

The components identified by mark ⚠ or dotted line with mark ⚠ are critical for safety. Replace only with part number specified.	Les composants identifiés par une marque ⚠ sont critiques pour la sécurité. Ne les remplacer que par une pièce portant le numéro spécifié.

Ref. No.	Part No.	Description			Remarks
		< RESISTOR >			
R974	1-249-441-11	CARBON	100K	5%	1/4W
R975	1-249-429-11	CARBON	10K	5%	1/4W
		< RELAY >			
⚠RY971	1-755-276-11	RELAY, POWER			
		< TRANSFORMER >			
⚠T972	1-435-209-11	TRANSFORMER, POWER (CND,US)			
⚠T972	1-435-210-11	TRANSFORMER, POWER (AED,AEP,CIS,G,UK)			
**********					
	1-676-192-11	TRANS BOARD			
		**********			
	1-533-293-31	FUSE HOLDER			
		< CAPACITOR >			
C941	1-126-969-11	ELECT	220uF	20.00% 50V	
		< CONNECTOR >			
CN975	1-564-321-00	PIN, CONNECTOR 2P (AR,AUS,E,EA,KR,MX,MY,SP,TH,TW)			
* CN977	1-564-527-11	PLUG, CONNECTOR 12P			
		< DIODE >			
D977	8-719-024-99	DIODE 11ES2-NTA2B			
		< FUSE >			
⚠F971	1-532-506-31	FUSE 6.3A (AR,E,EA,MX,MY,SP,TW)			
⚠F973	1-576-109-11	FUSE 5A (US,CIS)			
⚠F974	1-532-506-31	FUSE 6.3A (EXCEPT CIS)			
⚠F974	1-576-109-11	FUSE 5A (CIS)			
⚠F974	1-576-193-21	FUSE 6.3A (US)			
⚠F975	1-532-506-31	FUSE 6.3A (EXCEPT CIS)			
⚠F975	1-576-109-11	FUSE 5A (CIS)			
⚠F975	1-576-193-21	FUSE 6.3A (US)			
		< RESISTOR >			
⚠R941	1-202-972-61	FUSIBLE	1	5%	1/4W
⚠R951	1-219-120-11	FUSIBLE	0.15	5%	1/4W
⚠R952	1-219-120-11	FUSIBLE	0.15	5%	1/4W
⚠R953	1-219-120-11	FUSIBLE	0.15	5%	1/4W
R961	1-202-725-00	SOLID	3.3M	10%	1/2W (US)
		< TRANSFORMER >			
⚠T972	1-435-261-11	TRANSFORMER, POWER (AED,AEP,CIS,UK)			
⚠T972	1-435-262-11	TRANSFORMER, POWER (AR,AUS,E,EA,KR,MX,MY,SP,TH,TW)			
⚠T972	1-435-263-11	TRANSFORMER, POWER (CND)			
⚠T972	1-435-264-11	TRANSFORMER, POWER (US)			
		< SWITCH >			
⚠S951	1-771-291-31	SWITCH, POWER (VOL SEL) (AR,E,EA,MY,SP,TW)			
**********					

Ref. No.	Part No.	Description	Remarks
		MISCELLANEOUS	
		**********	
M961	1-763-072-11	FAN, D.C. (AR,AUS,E,EA,KR,MX,MY,SP,TH,TW)	
101	1-773-045-11	WIRE (FLAT TYPE) (17 CORE)	
104	1-773-122-11	WIRE (FLAT TYPE) (19 CORE)	
⚠108	1-696-847-11	CORD, POWER (AUS)	
⚠108	1-769-079-21	CORD, POWER (KR)	
⚠108	1-777-071-51	CORD, POWER (AED,AEP,CIS,EA,MY,SP,TW)	
⚠108	1-783-820-11	CORD, POWER (CND,US)	
⚠108	1-783-941-11	CORD, POWER (AR)	
⚠108	1-790-226-11	CORD, POWER (UK,G)	
⚠108	1-791-901-11	CORD, POWER (E,MX,TH)	
⚠109	1-569-008-31	ADAPTOR, CONVERSION (EA,MY,SP,TW)	
209	1-791-983-12	WIRE (FLAT TYPE) (8 CORE)	
216	1-471-035-11	MAGNET ASSY	
⚠222	8-820-116-01	OPTICAL PICK-UP BLOCK (KSM-213DAP)	
**********			
		**********	
		HARDWARE LIST	
		**********	
#1	7-628-254-05	SCREW +PS 2.6X5	
#2	7-685-646-79	SCREW +BVTP 3X8 TYPE2 N-S	
#3	7-685-647-79	SCREW +BVTP 3X10 TYPE2 N-S	
#4	7-685-650-79	SCREW +BVTP 3X16 TYPE2 N-S	
#5	7-685-648-79	SCREW +BVTP 3X12 TYPE2 N-S	
#6	7-685-881-09	SCREW +BVTT 4X8 (S)	

The components identified by mark ⚠ or dotted line with mark ⚠ are critical for safety. Replace only with part number specified.	Les composants identifiés par une marque ⚠ sont critiques pour la sécurité. Ne les remplacer que par une pièce portant le numéro spécifié.

REVISION HISTORY

Clicking the version allows you to jump to the revised page.
Also, clicking the version at the upper right on the revised page allows you to jump to the next revised page.

Ver.	Date	Description of Revision
1.0	2000.01	New
1.1	2002.07	Base unit (BU-K2BD38) of supply form is corrected (SPM-02046)